ALICE & OZ

Manual

LED FOLLOWSPOTS

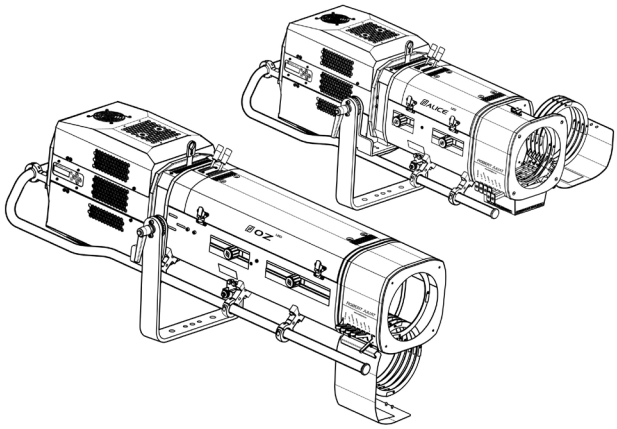

OZ 1169TC / ALICE 1469TC (TOP CONTROL)

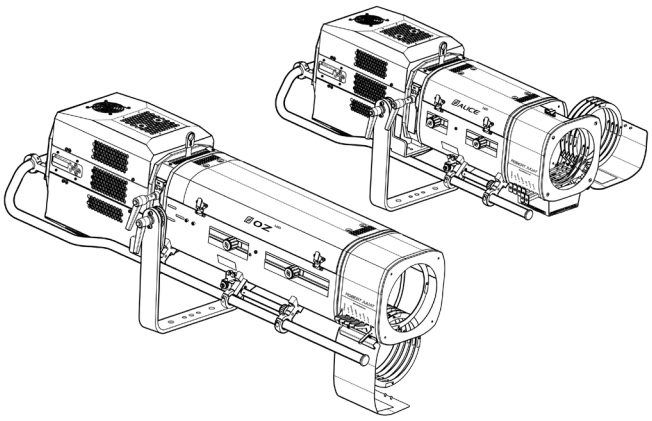

OZ 1169 / ALICE 1469

600 W LED

Angles	Controls	Model	
		Standard / CE	North American
7 – 14,5°	**On top**	**1169TC (v3)**	**1169CTC (v3)**
13 – 24°	**On top**	**1469TC (v3)**	**1469CTC (v3)**

Angles	Controls	Model	
		Standard / CE	North American
7 – 14,5°	**On the side**	**1169 (v3)**	**1169C (v3)**
13 – 24°	**On the side**	**1469 (v3)**	**1469C (v3)**

Product version:
V3

Software:
FIRMWARE V4.00

Date: 19/01/24

ROBERT JULIAT

DN41135201 (EN)

Robert Juliat S.A.S. 32, rue de Beaumont, F 60530 Fresnoy-en-Thelle - phone : +33 (0)3 44 26 51 89 - info@robertjuliat.fr

www.robertjuliat.com

Table of Contents

1 User's instructions 1
2 Presentation 2
2.1 Functions 2
2.2 Identification label 3
2.3 Accessories included 3
2.4 Optional accessories 4
3 Set-up 5
3.1 Mechanics 5
3.1.1 Operating positions 5
3.1.2 Minimum distance between a flammable material and the lighting unit 5
3.1.3 Instructions for use 5
3.1.4 Lifting 5
3.1.5 Stand set-up 6
3.2 Electrical information 7
3.2.1 LED source 7
3.2.2 Power supply 7
3.3 DATA 8
3.3.1 DMX 512-A / RDM 8
3.3.2 Art-Net / sACN 9
3.3.3 Ethernet / DMX node 9
3.4 Accessories 10
3.4.1 Full closing iris cassette 10
3.4.2 Colour changer unit - boomerang (only available for OZ) 10
3.4.3 Colour changer unit - push-pull (ALICE) 11
3.4.4 Gobo holder 11
3.4.5 Double slot front cassette for 215 x 215 mm accessories (option) 12
3.4.6 Frosted / CTO glass (option) 12
3.4.7 Internal glass holder 120 x 120 mm (option) 13
3.4.8 Horizontal chopper (option) 13
3.4.9 Stands 14
3.4.10 Heavy duty adjustable yoke (option) 14
3.4.11 Telrad followspot sight (option) 14
3.4.12 Flight-case (option) 15
4 Operations 16
4.1 Light intensity 16
4.1.1 Range 16
4.1.2 Control 16
4.1.3 Parameters 16
4.1.3.1 Dimming resolution - DMX only 16
4.1.3.2 Dimming curve 16
4.1.3.3 Master control 17
4.1.3.4 Set maximum position 17
4.1.3.5 Dimming mode 17
4.2 Strobe 18
4.2.1 Range 18
4.2.2 Control 18
4.3 Response time 18
4.3.1 Range 18
4.3.2 Control 18
4.4 Beam size adjustment 19
4.4.1 Range 19
4.4.2 Control 19
4.5 Pan / Tilt 20
4.5.1 Range 20
4.5.2 Control 20
4.6 Iris 21
4.6.1 Range 21
4.6.2 Control 21
4.7 Gobo 21
4.7.1 Range 21
4.7.2 Control 21
4.8 Colour 22
4.8.1 Range 22
4.8.2 Control 22
4.9 Frost and correction filters 23
4.9.1 Range 23
4.9.2 Control 23
4.10 Horizontal chopper 24
4.10.1 Range 24
4.10.2 Control 24
5 Controls and parameters 25
5.1 Local display and controls 25
5.1.1 Display 25
5.1.2 Menu 26
5.1.3 Parameters 27
5.2 DMX512 - A remote control 28
5.2.1 Protocol 28
5.2.2 Configuration 28
5.2.3 Parameters 29
5.2.3.1 DMX Hold 29
5.2.4 DMX chart 30
5.2.5 DMX ranges 30
5.2.5.1 Strobe duration 30
5.2.5.2 Strobe speed 30
5.2.5.3 Response time 30
5.2.5.4 Control mode 30
5.3 RDM remote control 31
5.3.1 Protocol 31
5.3.2 Functions 31
5.4 Art-Net remote control 33
5.4.1 Protocol 33
5.4.2 Configuration 33
5.4.3 Local set-up 34
5.5 sACN remote control 35
5.5.1 Protocol 35
5.5.2 Configuration 35
5.5.3 Local set-up 36
5.6 Dual remote control 37
5.6.1 Protocol 37
5.6.2 Configuration 37
5.6.3 Local set-up 38
5.7 Web interface 39
5.7.1 Control 39
5.7.2 Default IP address 39
5.7.3 Network IP of the computer 39
5.7.4 Connect to web interface 39
5.8 Fan cooling modes 40
5.8.1 Range 40
5.8.2 Control 40
5.9 Gel Fan mode 40
6 Service 41
6.1 Preventive maintenance 41
6.1.1 Frequency 41
6.1.2 General cleaning 41
6.1.3 General visual check 41
6.1.4 LED source 41
6.1.5 Optics 41
6.1.6 Inner fans & LED glass protection cleaning 42
6.2 Analysis 42
6.3 Local potentiometer 43
6.4 Electronic thermal management system 44
6.5 Firmware update 44
6.6 Factory defaults 44
6.6.1 Modes 44
6.6.2 Control 44
6.7 Selftest 45

1 User's instructions

EN

GENERAL INSTRUCTIONS

1. Not for residential use.
2. These fixtures must only be serviced by a qualified technician.
3. In addition to the instructions indicated on this page, relevant health and safety requirements of the appropriate EU Directives must be adhered to at all times.
4. This fixture is in compliance with section 17 - Lighting appliance for theatre stages, television, cinema and photograph studios. Standards NF EN 60598-1, NF EN 60598-2-17, Low Voltage Directive 2014/35/UE & EMC Directive 2014/30/UE.
5. This fixture is rated as IP20, and is for indoor use only.

FIXTURE

6. Ensure fixture is correctly mounted on an appropriate support.
7. Protection screens and lenses must be replaced in the event of any damage, such as cracks or deep scratches, since these might reduce performance.
8. When hung or flown the fixture must be secured by an additional hanging accessory (such as a safety cable or bond) of suitable length.
9. Safety bonds or cables must be securely attached to the back of the fixture and be as short as possible, or rolled up as necessary, to minimise travel distance should the fixture be dislodged.
10. Movable accessories (scroller, etc.) must also be secured with a suitable safety cable or bond at the front of the fixture.
11. The combined weight of both the fixture and the accessories must be considered when choosing the load-bearing capability of safety cable or bond.
12. Do not open lighting fixture when the source is on.
13. WARNING: LED source become hot during use. Allow fixture to cool before servicing.
14. Do not tamper with design of fixture nor any of its safety features.
15. Tighten electrical mains cable connections regularly and replace with one of identical specification if damaged.
16. Use only with correct power supply.

VENTILATION

17. Keep well away from flammable material.
18. Not for outdoor use. Do not cover. Do not permit fixture to get wet.
19. To avoid overheating, do not obstruct air vents.
20. Ensure any cooling fans are in correct working order. If fans are not working, turn fixture off immediately and service as necessary.

CLEANING

21. Do not touch the LED source with your fingers.
22. To clean the optical parts, use a soft cloth in combination with distilled water or isopropyl alcohol recommended for coated optics. Do not use any cleaning product that contains solvents or abrasives, as these can cause surface damage. Dry with a soft lint-free cloth.
23. Regularly remove dust with a soft lint-free cloth.
24. If the fixture has filters, they must be cleaned frequently.

POWER SUPPLY

25. Disconnect from the mains before servicing.
26. Mains connection only. Do not connect to "electronic output" such as dimmer.
27. Ensure power supply circuit breakers, always remain accessible.

PLEASE NOTE

This product has been built to conform to European standards relating to professional lighting equipment.
Any modification made to our products will void the manufacturers' warranty.

Photobiological safety according to EN62471

Risk group 2
CAUTION: Possibly hazardous optical radiation emitted from this product. Do not stare at operating lamp. Maybe harmful to the eye.

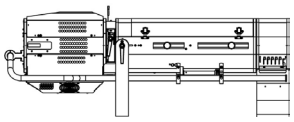

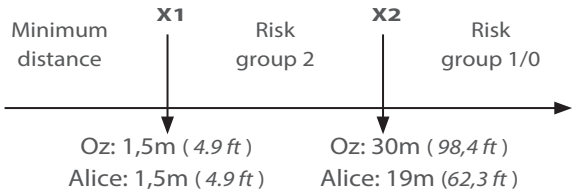

Group risk 2. Luminaires should be positioned so that prolonged staring into luminaire at a distance closer than 30m (Oz) & 19m (Alice) is not expected.

2 Presentation

2.1 Functions

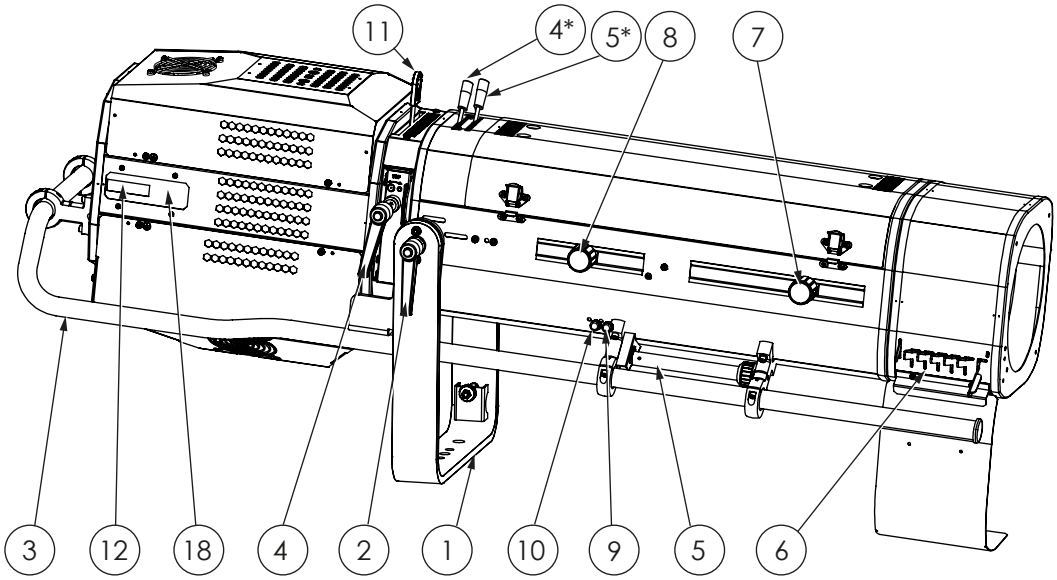

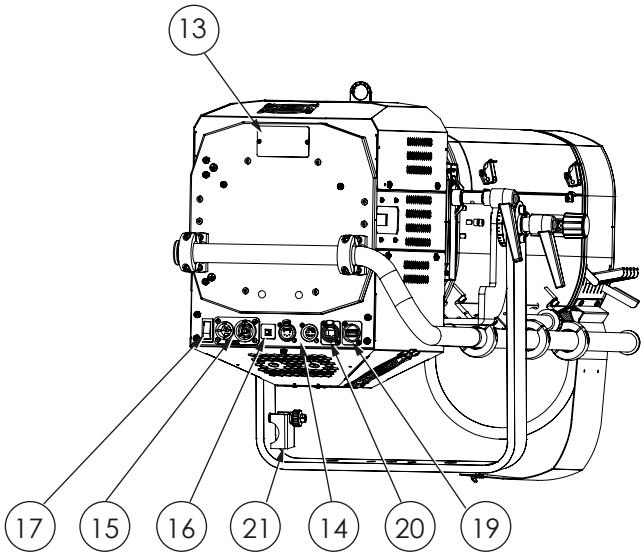

Description	
1. Yoke 2. Yoke locking 3. Side operating 4. Iris control (1169/1469 only) 4*. Iris control (1169TC/1469TC only) 5. Dimming control (1169/1469 only) 5*. Dimming control (1169TC/1469TC only) 6. Colour changer 7. Zoom adjustment 8. Focus adjustment 9. Frost glass	10. Spare filter 11. Gobo holder 12. Local display 13. Identification plate 14. Data connectors (OUT and IN) 15. Power connectors (IN and OUT) 16. Thermal breaker 17. Power switch 18. Control board 19. USB connector 20. RJ45 connector 21. Cable lock

2.2 Identification label

Description

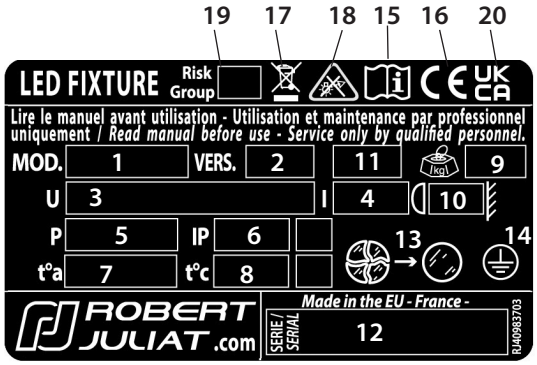

Units :
- *Weight = kilogram (kg).*
- *Intensity = Ampere (A).*
- *Voltage = Volt (V).*
- *Frequency = Hertz (Hz).*
- *Temperature = degree Celsius (°C).*

1. MOD. : Model
2. VERS. : Version
3. U : Nominal voltage input (V)
4. I : Nominal intensity (A)
5. P : Maximum power input (W)
6. IP : International Protection Rating
7. t°a : Maximum ambient temperature (°C)
8. t°c : Maximum external temperature of the unit (°C)
9. Net weight (kg)
10. Minimum distance between a flammable material and the lighting unit (m)
11. LED type
12. Serial number
13. Replace broken glass
14. Class 1 product label
15. Read manual first label
16. European conformity label
17. WEEE directive label
18. CEI-TR-62778 - Do not stare at light source
19. EN62471 - Risk group
20. UKCA (UK Conformity Assessed) label

2.3 Accessories included

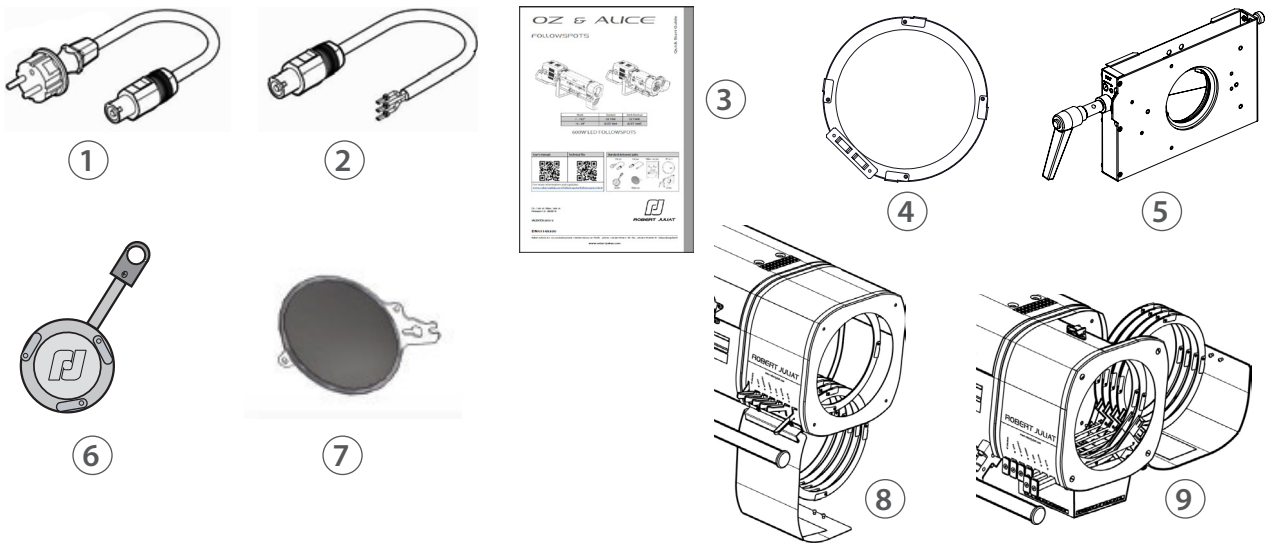

	Reference	Description
1	CAL03	3 meter power cable (3G1,5 HO7RNF) with Neutrik PowerCon© True1 and CEE 7/7 (2P+T NF/SCHUKO) connectors (standard version)
2	CAL04	1,50m power cable UL/CSA with Neutrik® powerCON TRUE1 connector (North American version)
3	DN41145300	Quick Start manual
4	PF1011	Ø210 mm metal filter holder (x6)
5	CCU1	Full closing iris cassette - Ø72mm
6	SGUP2	Universal "A" size gobo-holder (metal, glass, frosted glass)
7	VDM100	Ø97mm frosted glass with holder
8	M210B	6-way "boomerang" colour changer (included only for Oz)
9	M210T	6-way "Push/Pull" colour changer (included only for Alice - optional for Oz)

2.4 Optional accessories

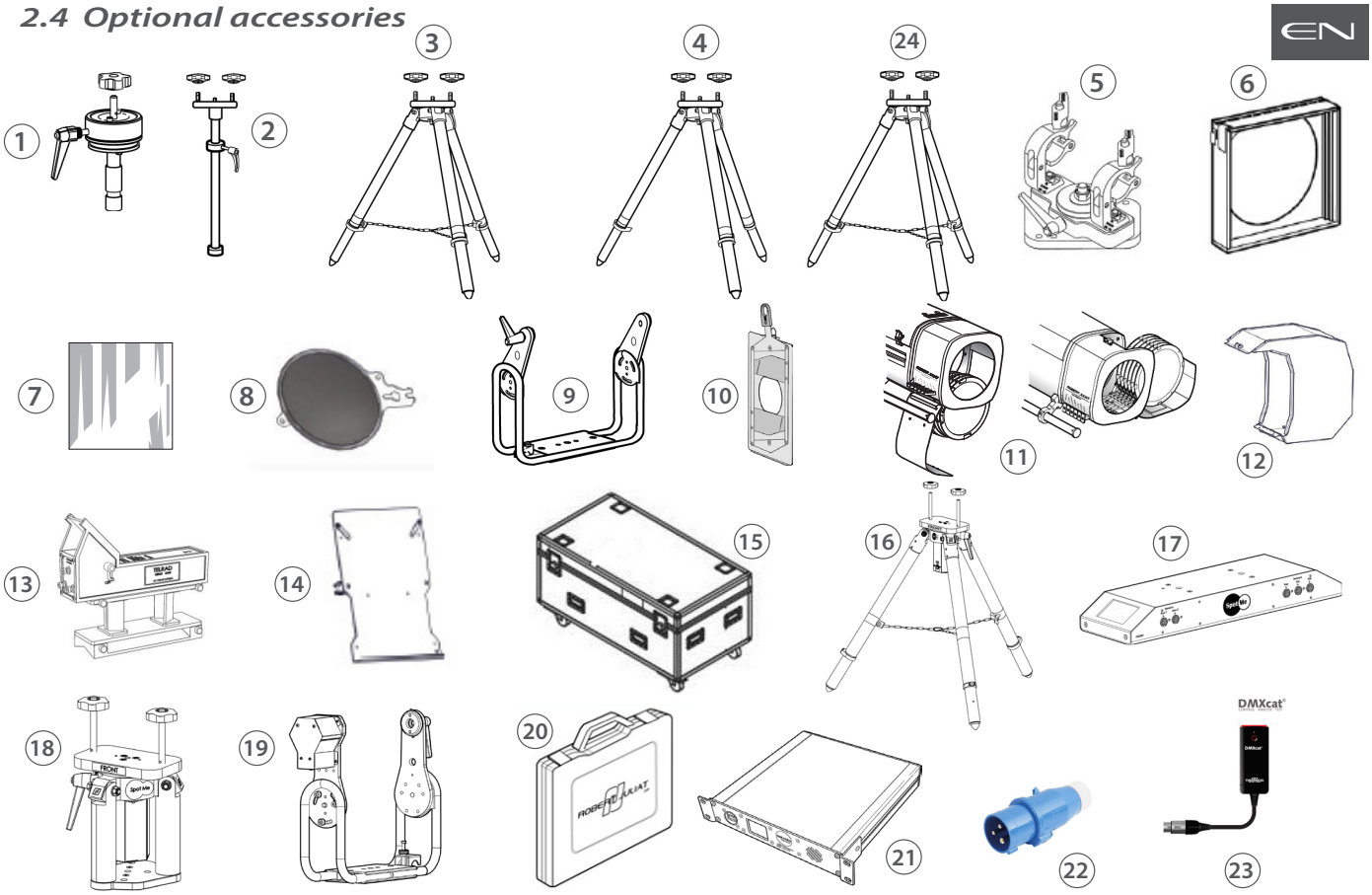

	Reference	Description
1	T1000	TV spigot with followspots swivel head
2	JPP	Monopod stand for overhead followspot
3	GT4000	Tripod stand with safety chain - SWL: 130 Kg - max. height: 1030 mm
4	GT4000S	Tripod stand without safety chain - SWL: 130 Kg - max. height: 1030 mm
5	T4000	Followspot mount for Ø50mm pipe (suspension or overhead) - SWL= 100 Kg
6	CAV700A	Double slot front cassette for 215x215mm accessories
7	VD120	120x120mm frosted glass
8	FCM100R	Ø97mm 1/2 CTO correction filter with holder
9	FRO/1017PD	Heavy duty adjustable yoke
10	Kit G80	Ø80mm chopper kit (G80+ GR120+ adaptation kit)
11	M210B	6-way "boomerang" colour changer (only available for OZ)
	M210TM	6-way "push-pull" colour changer (option available for OZ)
12	M210TVCL	Light shield for M210T push/pull colour changer
13	Kit TELRAD	Telrad followspot sight with raiser and universal mounting kit
14	SDUP	Followspot cue sheet holder with universal mounting kit
15	FC1169/S	Flight-case for Compact range (LED version) / GT stand / P.S.U. / accessories
16	GT4000RSM	Tripod stand with safety chain - SWL: 130 Kg - max. height: 1030 mm (equipped with PAN sensor)
17	SMS	SpotMe server + 2 sensor cables + flight case
18	T4000RSM	Followspot mount with ball head rotation ans SpotMe PAN sensor SWL = 100 Kg - Weight: 8,83 Kg.
19	FRO/SMEPV	Heavy duty adjustable yoke equipped with TILT SpotMe sensor (E type)
20	TCSM	SpotMe calibration tool kit
21	Maestro	Maestro server for SpotMe - rackable unit: 1U - half 19"
22	PCP1716A	16A blue 2P+E 6h IEC60309 power connector
23	DMXcat	Bluetooth DMX/RDM Multifunction test tool - City Theatrical DMXcat®
24	GT4000R	Tripod stand with ball head rotation with security chain - SWL: 130 Kg - max. height: 1030 mm

3 Set-up

3.1 Mechanics

3.1.1 Operating positions

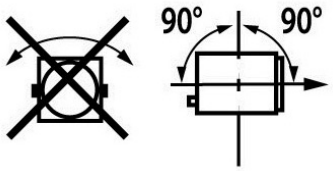

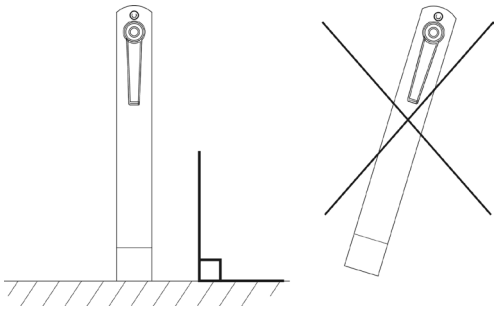

3.1.2 Minimum distance between a flammable material and the lighting unit

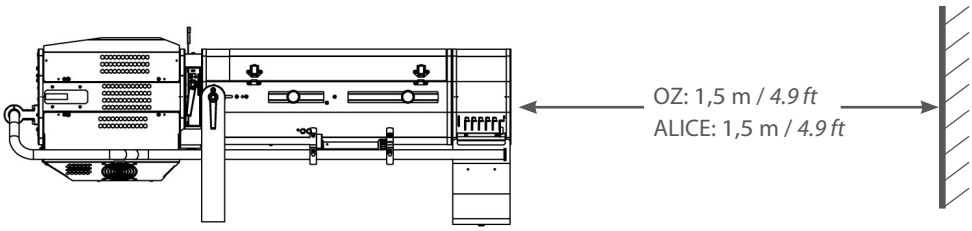

3.1.3 Instructions for use

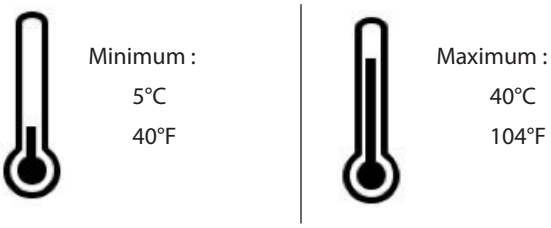

IP20 - Indoor use only

3.1.4 Lifting

- Net weight for
  OZ: 42 Kg (*92.59 lbs*)
  ALICE: 41.6 Kg (*91.71 lbs*)

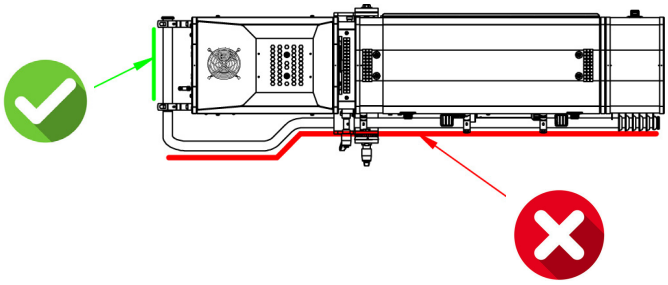

3.1.5 Stand set-up

The unit must be installed only on a Robert Juliat compatible stand / head :	
T1000	TV spigot with followspots swivel head
JPP	Monopod stand for overhead followspot
GT4000	Tripod stand with safety chain - SWL: 130 Kg - max. height: 1030 mm
GT4000S	Tripod stand without safety chain - SWL: 130 Kg - max. height: 1030 mm
GT4000R	Tripod stand with ball head rotation with security chain - SWL: 130 Kg - max. height: 1030 mm
T4000	Followspot mount for Ø50mm pipe (suspension or overhead) - SWL= 100 Kg
GT4000RSM	Tripod stand with ball head rotation with safety chain and SpotMe PAN sensor - SWL: 130 Kg - max. height: 1030 mm
T4000RSM	Followspot mount with ball head rotation and SpotMe PAN sensor - SWL= 100 Kg

• GT4000 / GT4000S / GT4000R

Please refer to the relevant stand technical files for further details.

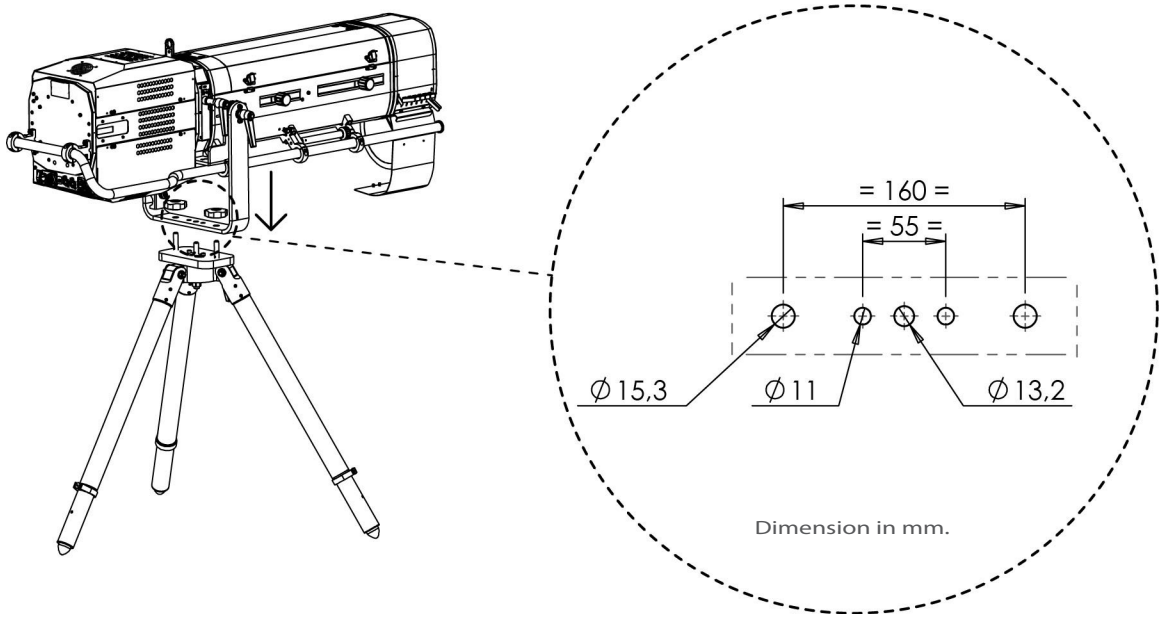

3.2 Electrical information

3.2.1 LED source

Never touch or scratch the LED surface.
Cf. 6.1.4 LED cleaning procedure if cleaning is necessary.

3.2.2 Power supply

Power supply			
Voltage	**Frequency**	**Input power**	**Connectors**
100 ➡ 264 V	50-60 Hz	3 A / 660 W @ 230V 5.8 A / 680 W @ 120V 7.1 A /690 W @ 100V Max: 8 A Standby mode: 8.5 W	Neutrik® powerCON TRUE1 TOP Input : ref. NAC3FPX-TOP
• Class 1 product. **This luminaire must be earthed.** • Must be connected directly to AC power. **Do not connect to dimmer power.** • Automatic mains voltage detection.			

Daisy chain (with delivered power cable):

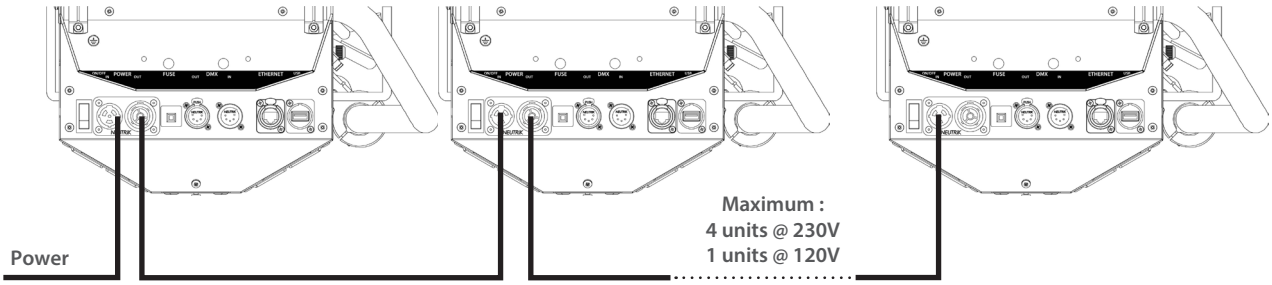

Power cable

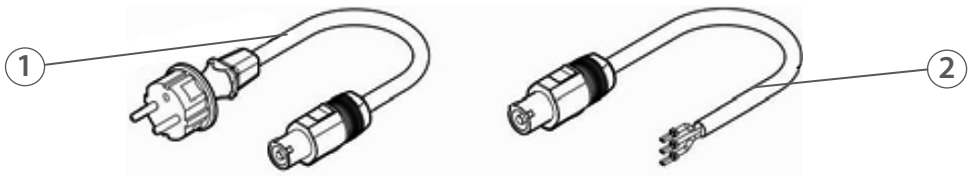

Power cable		Connector	Mains plug	Cable type	Cable length	Wiring
1	Standard version	Neutrik® powerCON TRUE1 TOP NAC3FX-W-TOP	CEE7/7	3G1.5 H07RNF	3 m *9.8 ft*	Live: Brown Neutral: Blue Ground: Yellow/Green
2	North American version		-	14AWG SJ TYPE (UL/CSA)	1.5 m *4.9 ft*	Live: Black Neutral: White Ground: Green

In

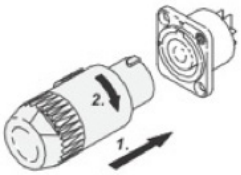

Out

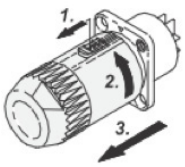

Power ON
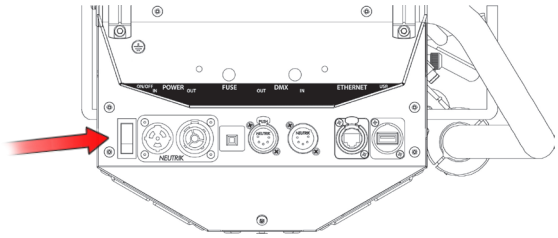

3.3 DATA

3.3.1 DMX 512-A / RDM

Protocol	Input connector	Output connector
USITT DMX 512-A RDM	XLR 5-pin	XLR 5-pin

DATA connectors			
PIN #	DMX	Description	
1	Shielding	Foil & Braided Shield	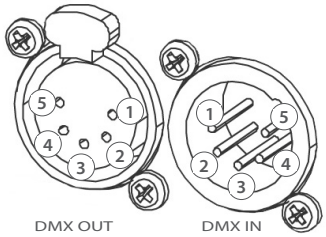
2	DMX (-)	1st conductor of 1st twisted pair	
3	DMX (+)	2nd conductor of 1st twisted pair	
4	Not used	1st conductor of 2nd twisted pair	
5	Not used	2nd conductor of 2nd twisted pair	

Daisy chain:

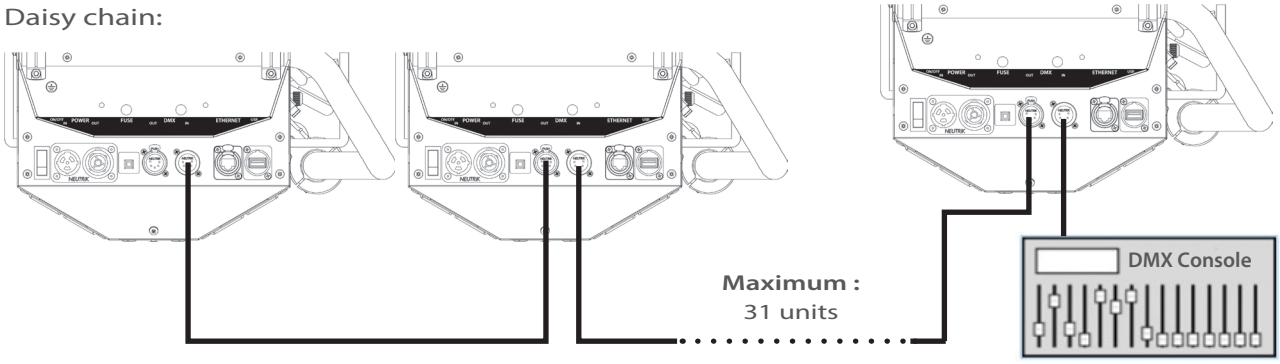

3.3.2 Art-Net / sACN

Protocol	Input connector	Output connector
Art-Net (V3 & V4) sACN DUAL (SACN + Art-Net)	RJ45	-

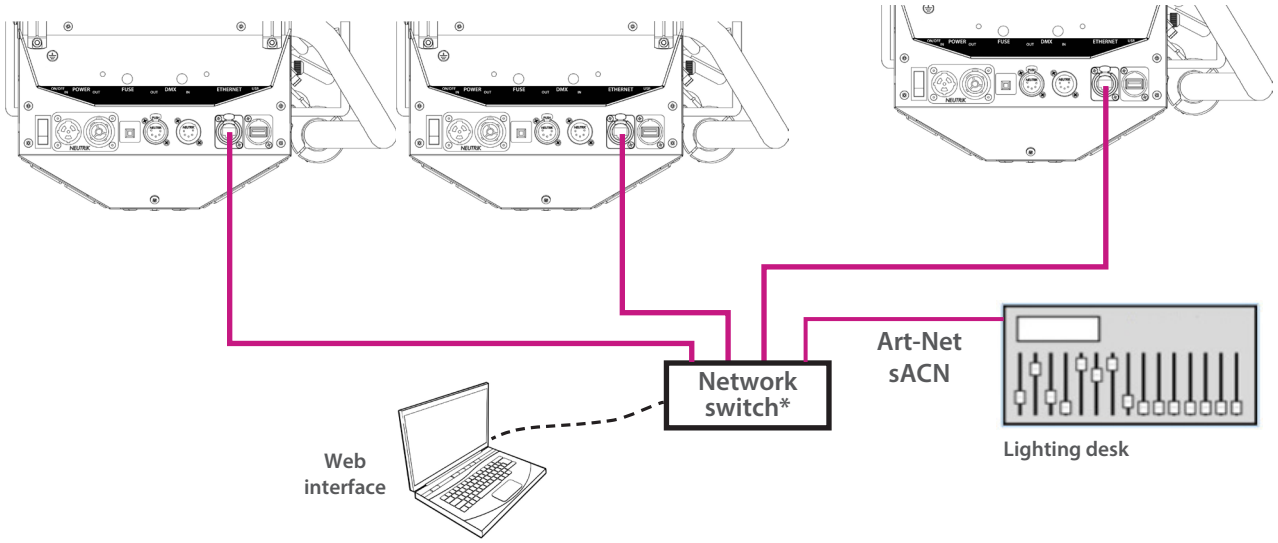

(*) A 1000 base-T switch that supports IGMP (Internet Group Management Protocol) is necessary if the unit is connected to a network switch to control multiple devices. The usage of non IGMP switch capability can cause erratic behavior of all connected devices.
For further reading: https://en.wikipedia.org/wiki/Internet_Group_Management_Protocol

3.3.3 Ethernet / DMX node

Protocol	Input connector	Output connector
Art-Net (V3 & V4) sACN DUAL (SACN + Art-Net)	RJ45	DMX

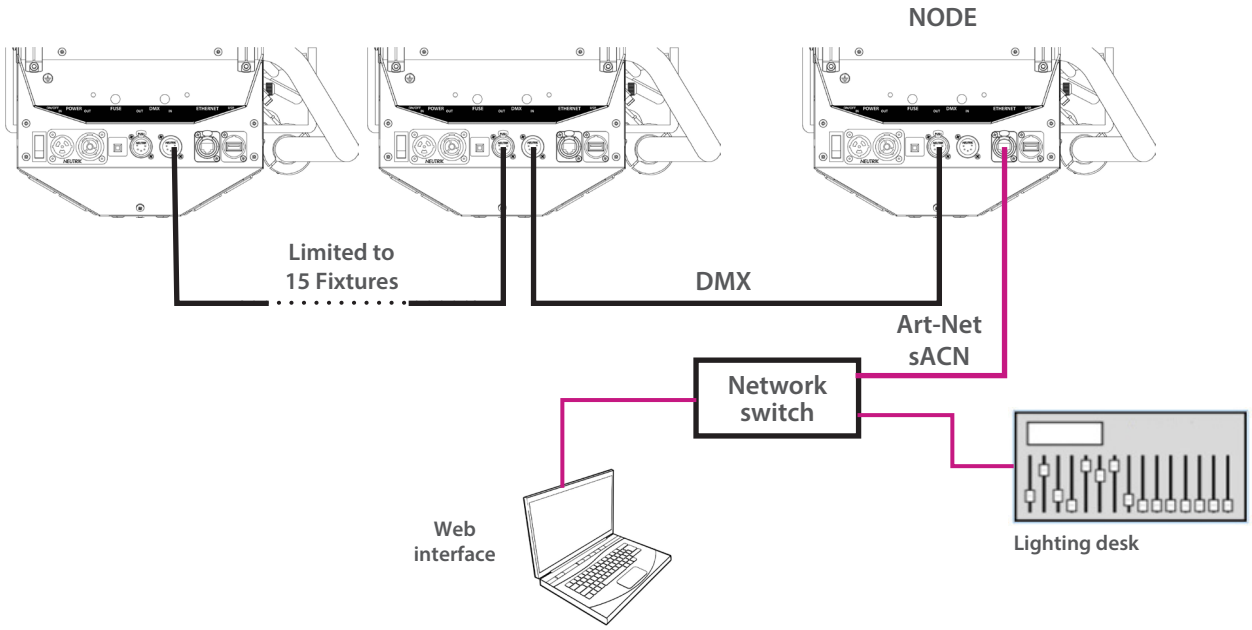

- **Node** function must be activated only on the first unit of the daisy chain (see **Web Interface** section of the manual).
- **Web interface** is always available regardless of the protocol (Art-Net / sACN) selected.

RJ-LED2 FIRMWARE PLATFORM (Node Mode) full manual is available for download at robertjuliat.com/LED/PDF_PAGE

3.4 Accessories

3.4.1 Full closing iris cassette

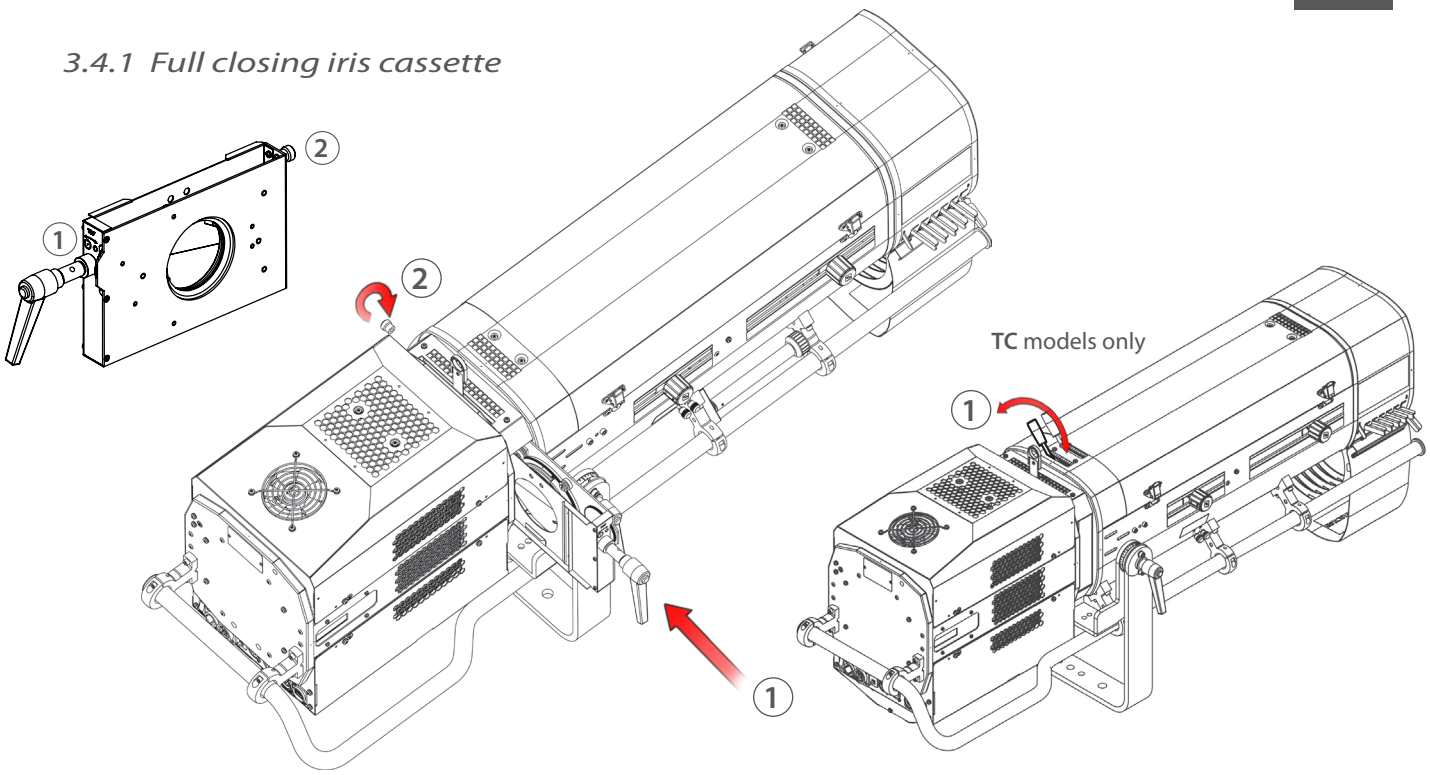

3.4.2 Colour changer unit - boomerang (only available for OZ)

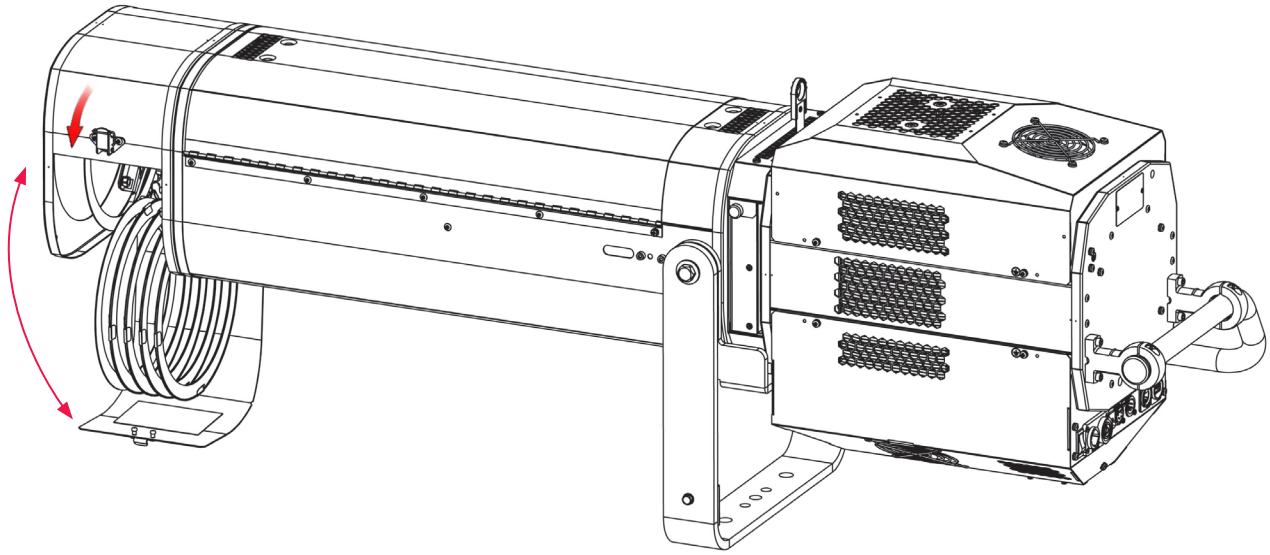

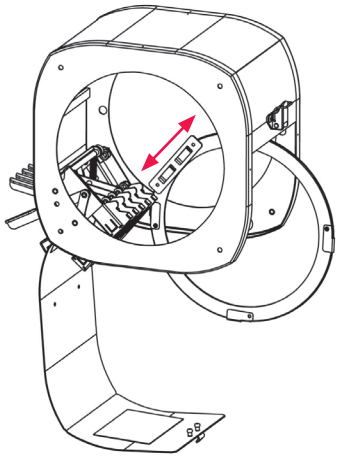

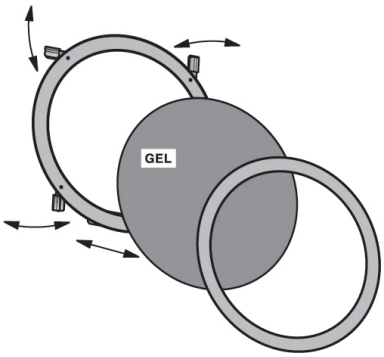

Dimensions Cf. 4.8.1

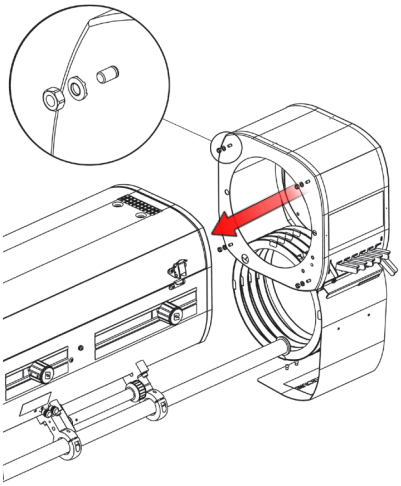

3.4.3 Colour changer unit - push-pull (ALICE)

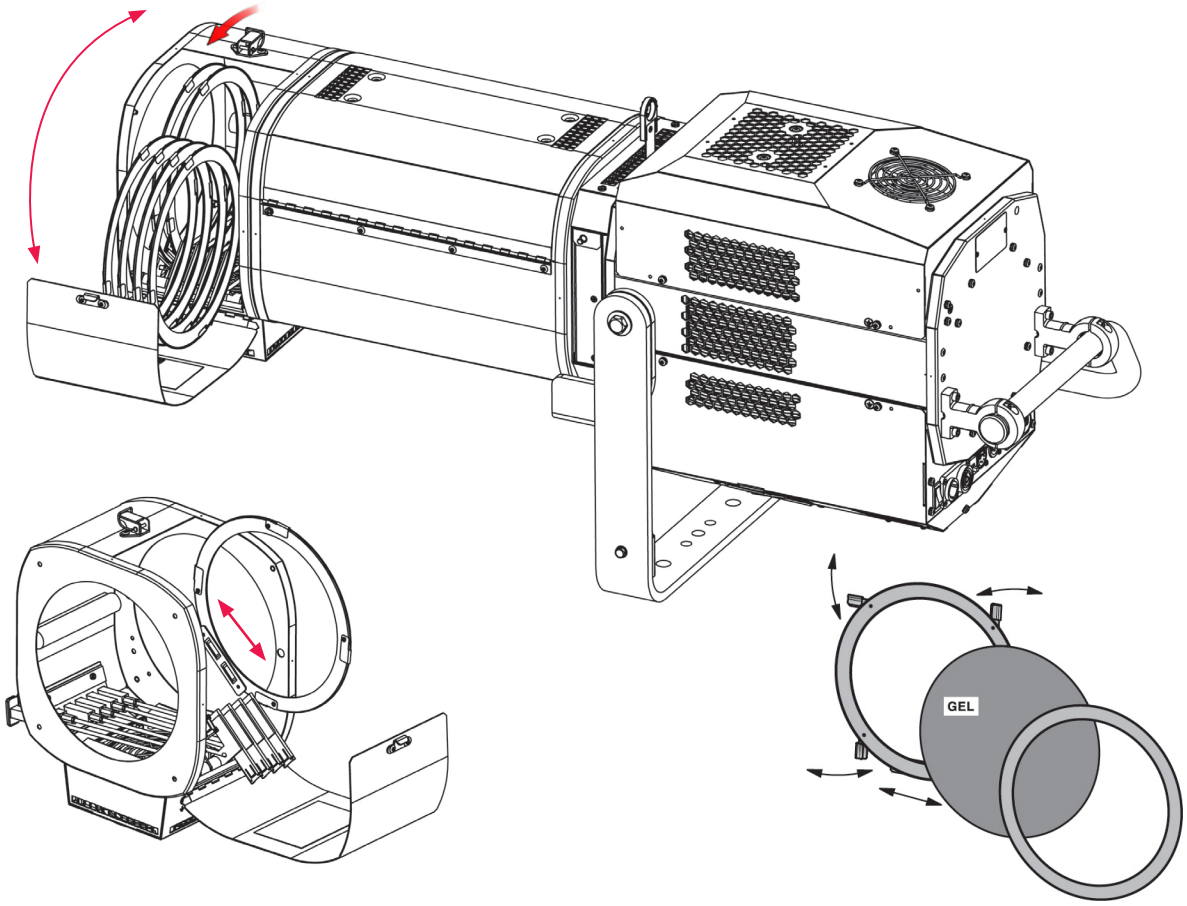

Dimensions Cf. 4.8.1

3.4.4 Gobo holder

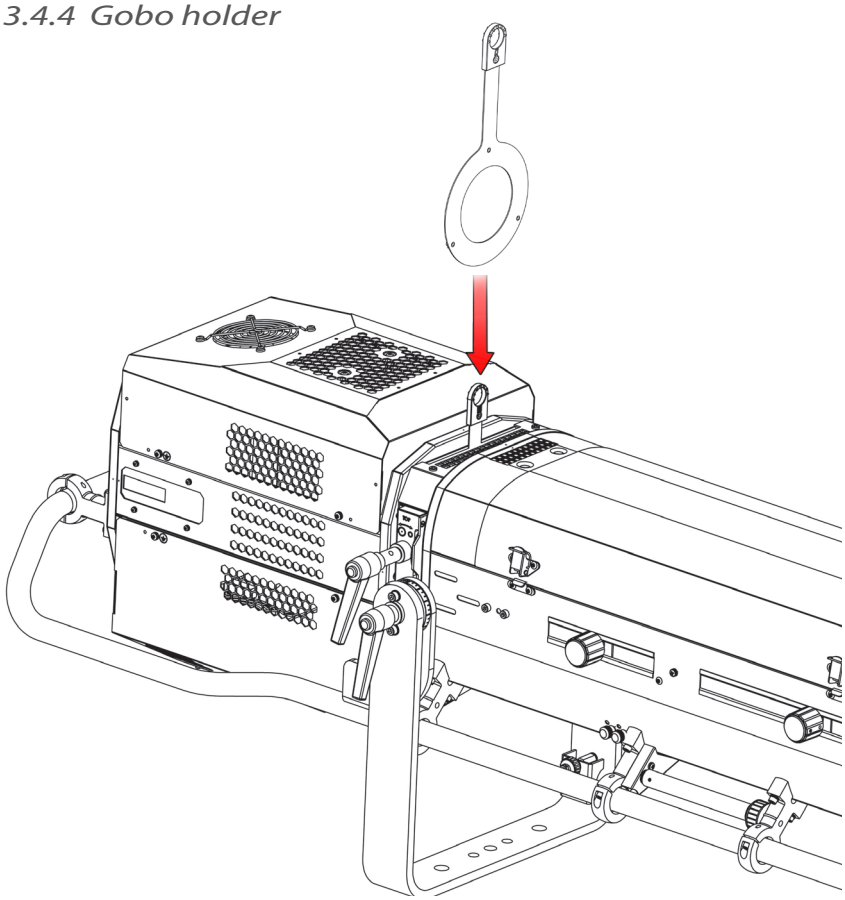

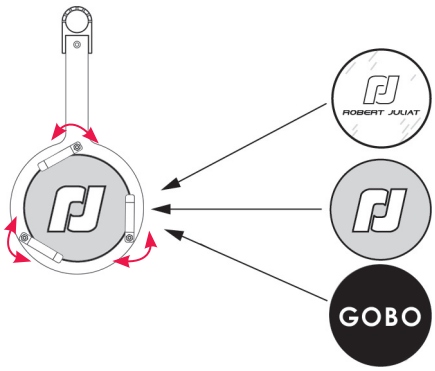

'A' size gobo
Dimensions Cf. 4.7.1

3.4.5 Double slot front cassette for 215 x 215 mm accessories (option)

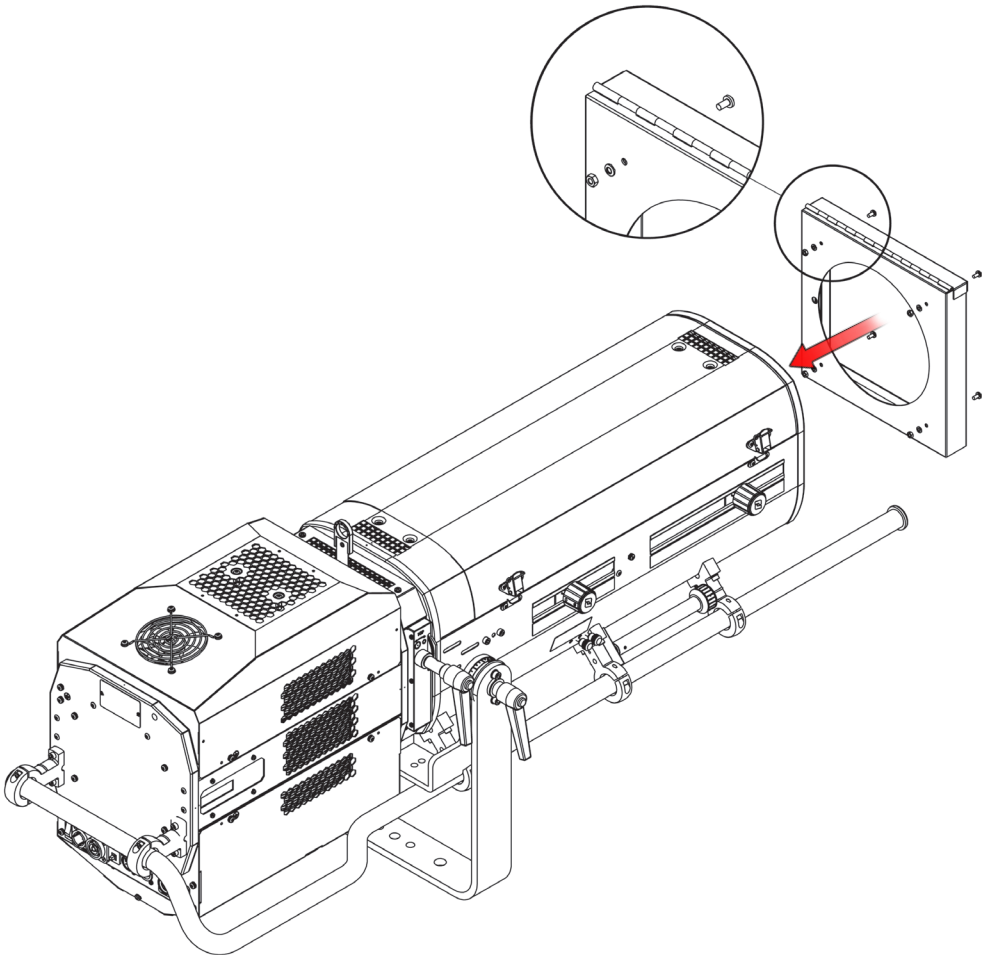

3.4.6 Frosted / CTO glass (option)

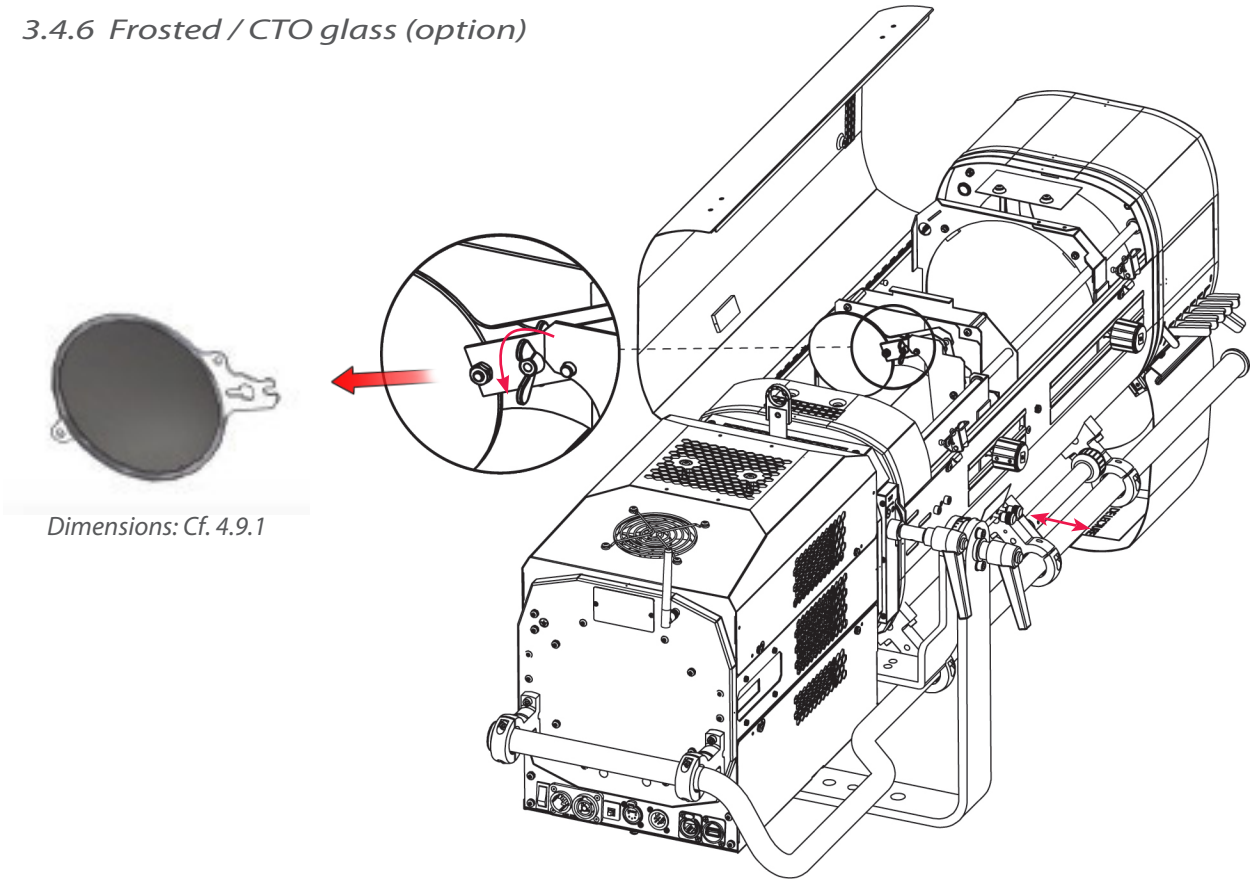

Dimensions: Cf. 4.9.1

3.4.7 Internal glass holder 120 x 120 mm (option)

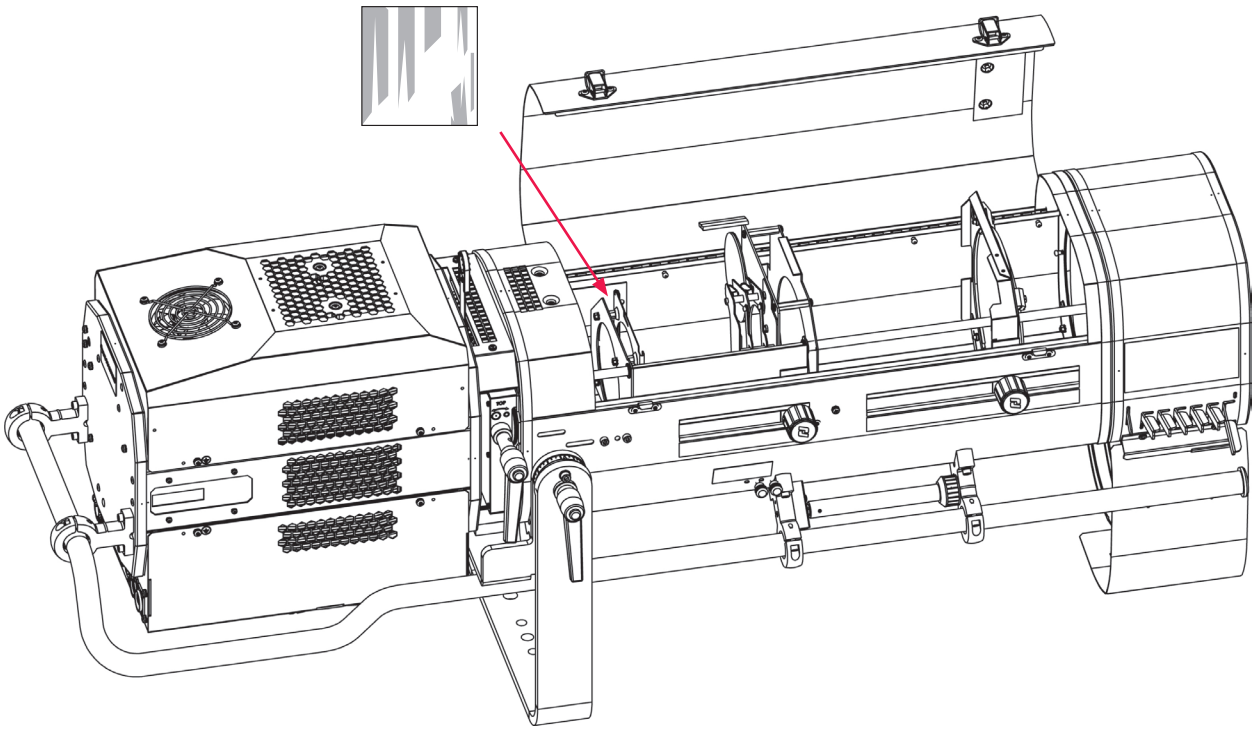

3.4.8 Horizontal chopper (option)

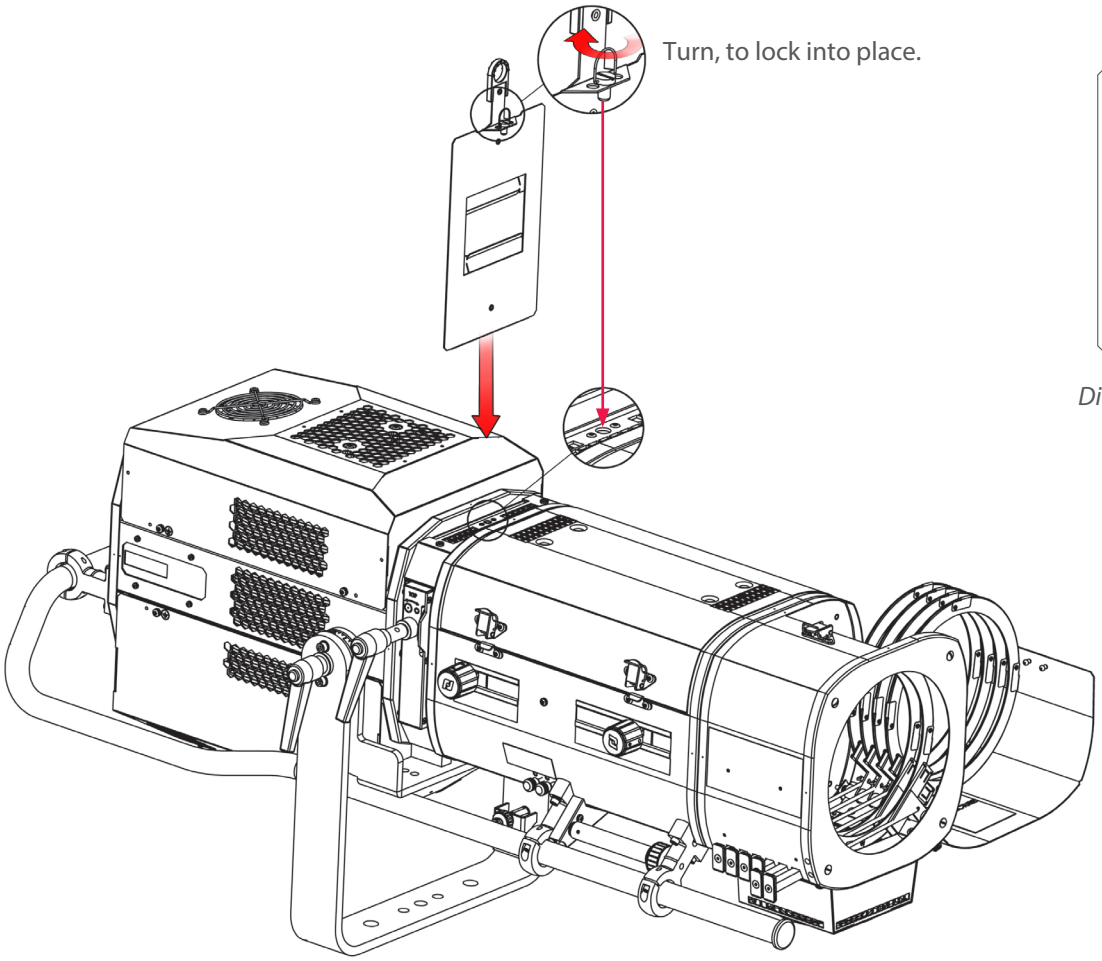

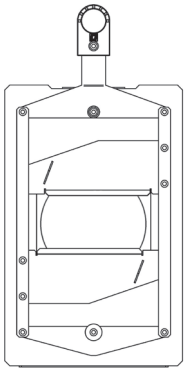

Dimensions: Cf. 4.10.1

3.4.9 Stands

• GT4000 Series : *Please refer to the relevant stand technical files for further details.*

Stand set-up, refer to Cf. 3.1.5.

3.4.10 Heavy duty adjustable yoke (option)

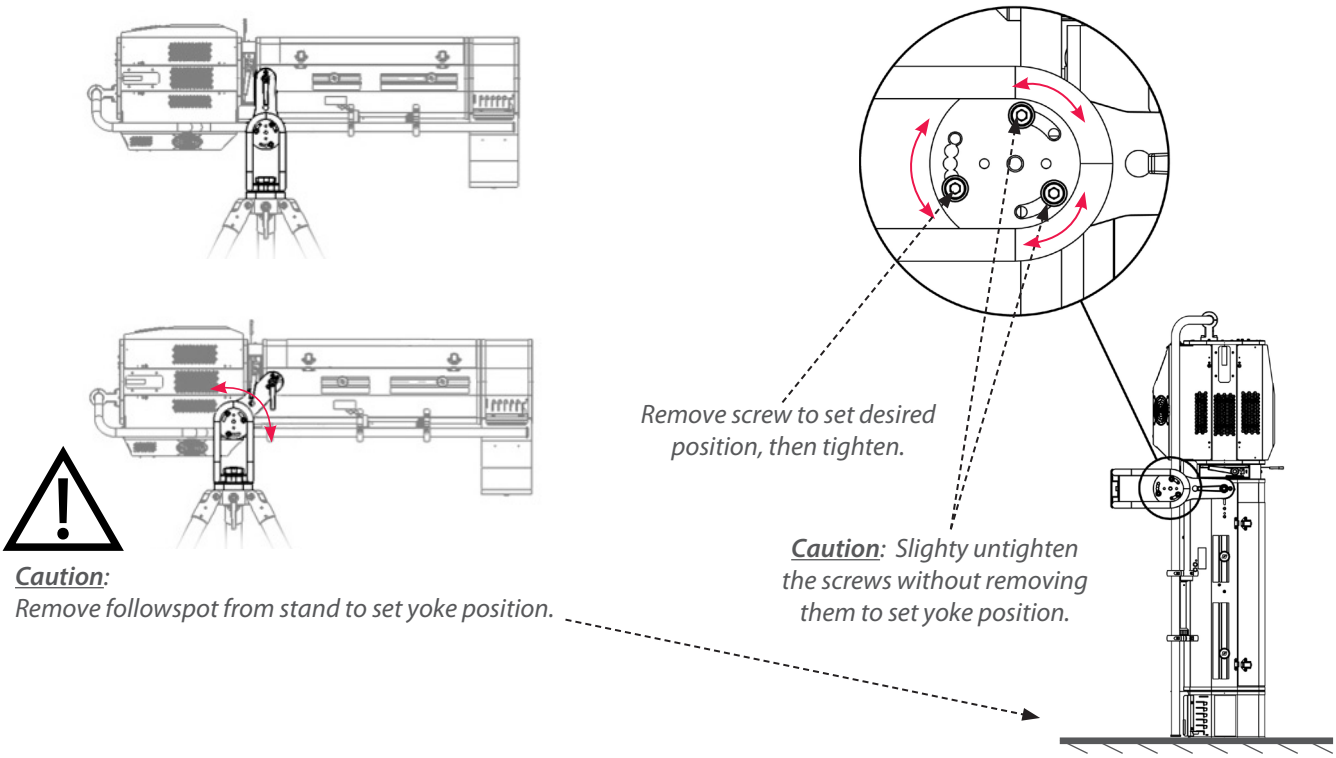

3.4.11 Telrad followspot sight (option)

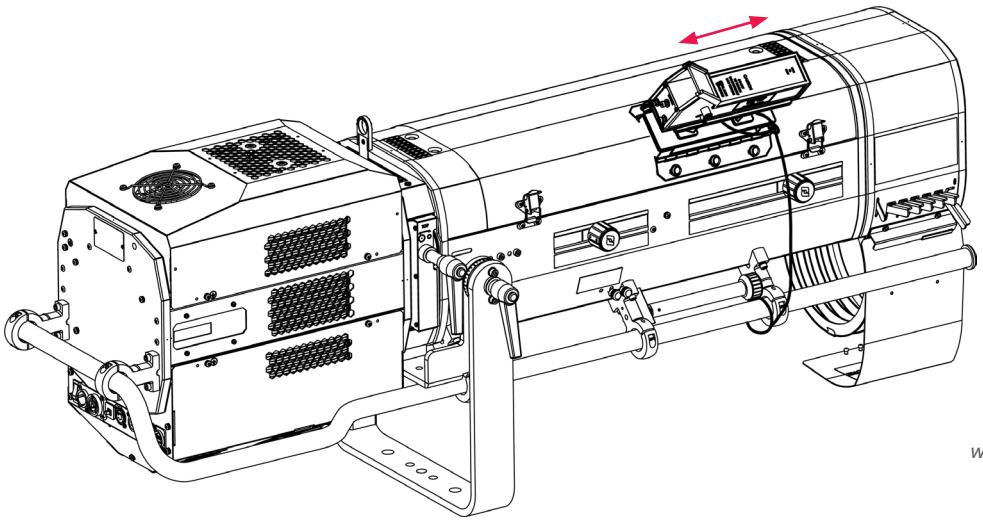

Followspot sight guide available @ www.robertjuliat.com/followspots/Accessories.html

Caution: - Do not install the followspot sight on the lamp house to avoid blocking the ventilation vents.
- Secure the sight with a suitable safety cable.

3.4.12 Flight-case (option)

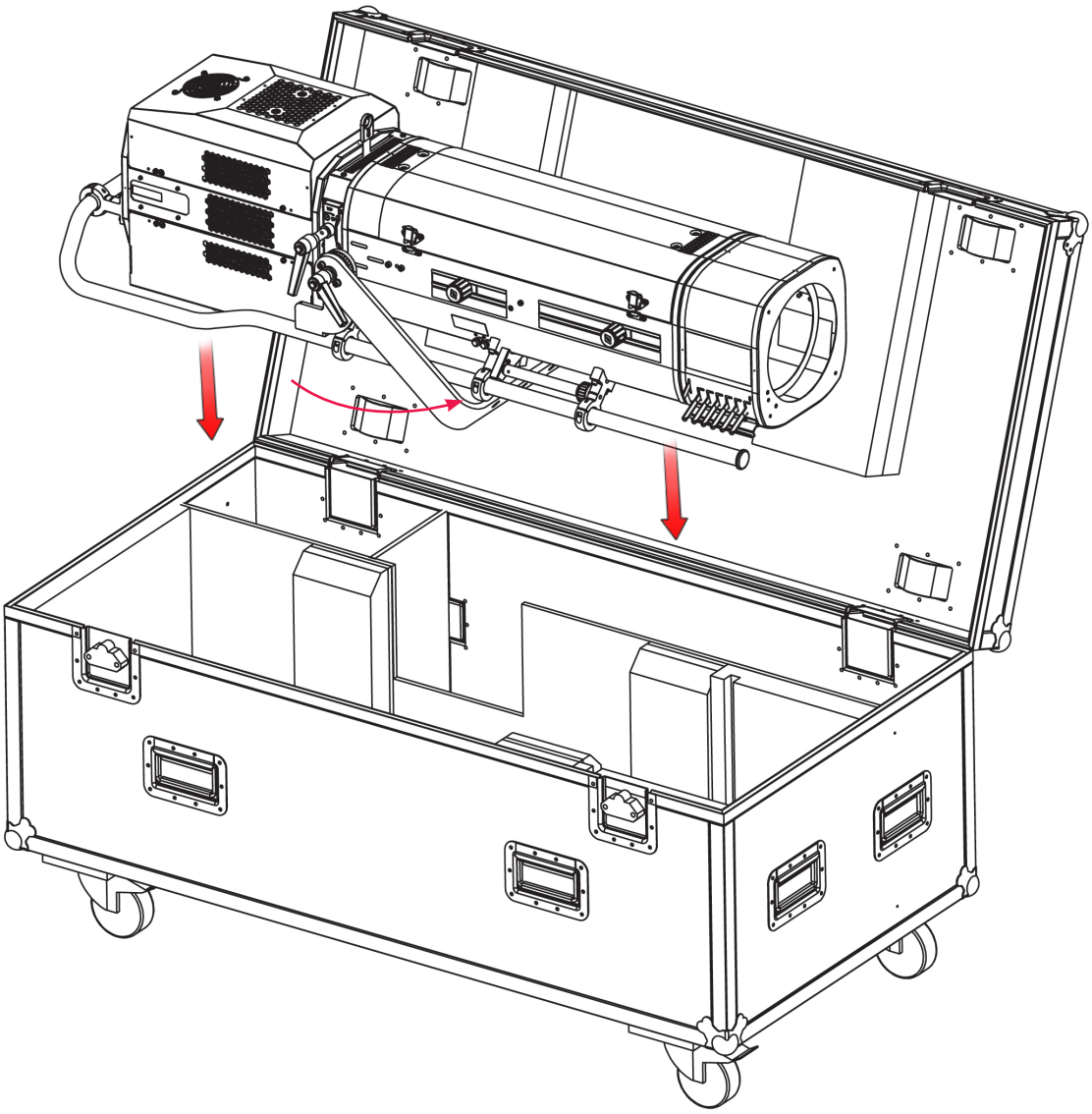

4.1 Light intensity

4.1.1 Range

• Dimming

4.1.2 Control

Remotely with DMX512-A protocol

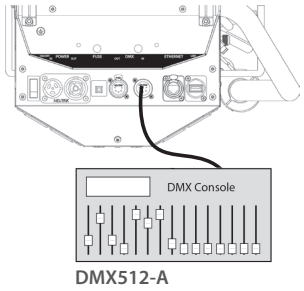

Locally via dimming control handle or top control

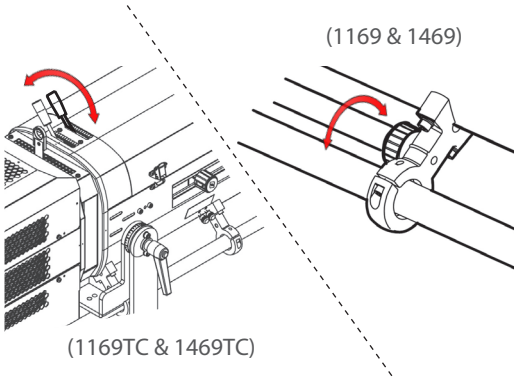

Locally via Standalone mode

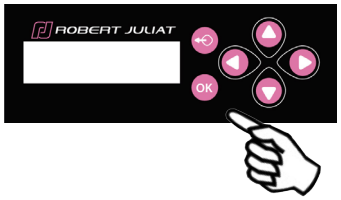

HTP mode (Highest Takes Precedence): Light output is the highest value of DMX512 command or local control
Focus mode: when standby screen displayed, Push Exit or up arrow for 3 secs → Light output = 100% for 1 minute 2x times Exit or up arrow → Light output = 0%

4.1.3 Parameters

4.1.3.1 Dimming resolution - DMX only

Resolution	DMX mode
8 bits – 255 steps	1 - 3 - 5
16 bits – 65 535 steps	2 - 4 - 6

4.1.3.2 Dimming curve

→ selection in SETUP/DIMMER/CURVE menu: LINEAR or SQUARE

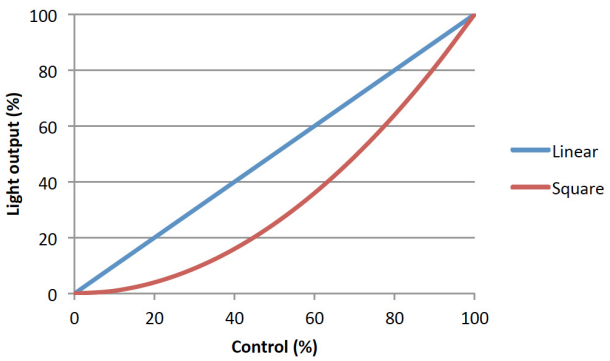

4.1.3.3 Master control

In order to supervise the operator from the console, master control DMX channel can be used.
This channel limits the maximum value of the dimmer shutter.
By using this function, it is possible to obtain synchronised fades with several spots or to give intensity limits (minimum and maximum) to the operator . Master is only active when DMX is detected.

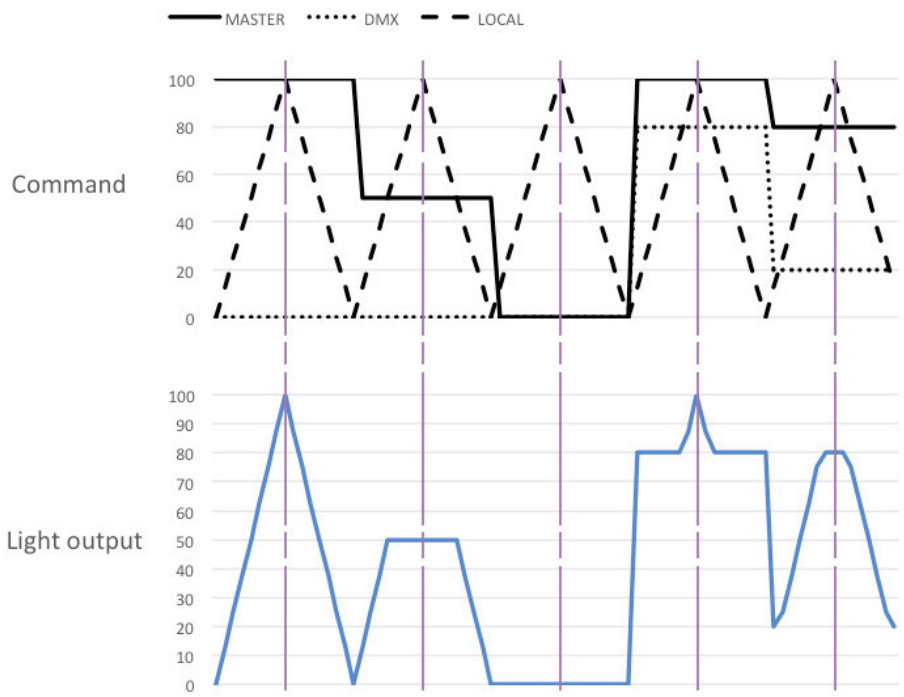

4.1.3.4 Set maximum position

→ Selection in *SETUP/DIMMER/ MAX* menu

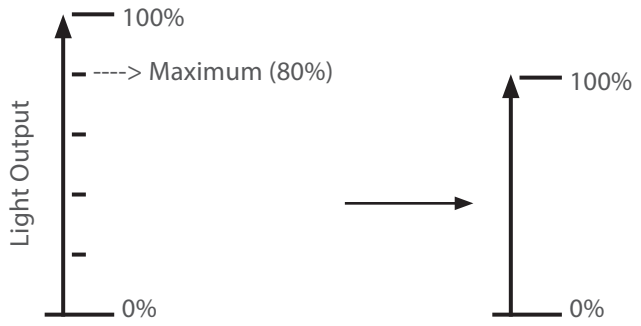

4.1.3.5 Dimming mode

➡ Selection in SETUP / DIMMER / DIMMING MODE menu

Mode	Result
Without PWM	Flicker-Free, perfect for filming
PWM 1,6 KHz	Very good dimming quality
PWM 3,2 KHz	Good dimming quality
PWM 20 KHz	Good dimming quality (Default Value)

4.2 Strobe

4.2.1 Range

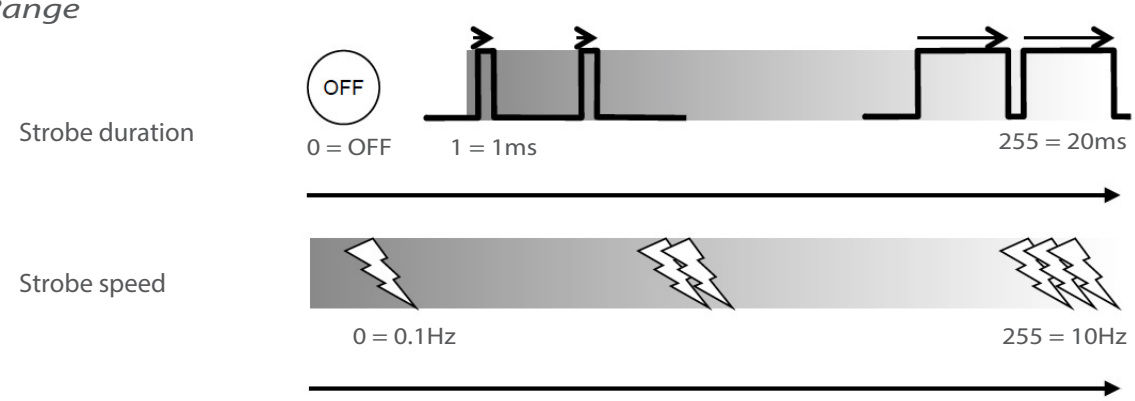

4.2.2 Control

➡ Remotely with DMX512-A / Art-Net / sACN protocols.
Mode 3 – 4

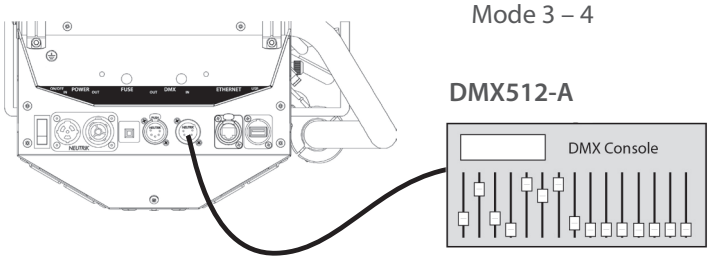

4.3 Response time

4.3.1 Range

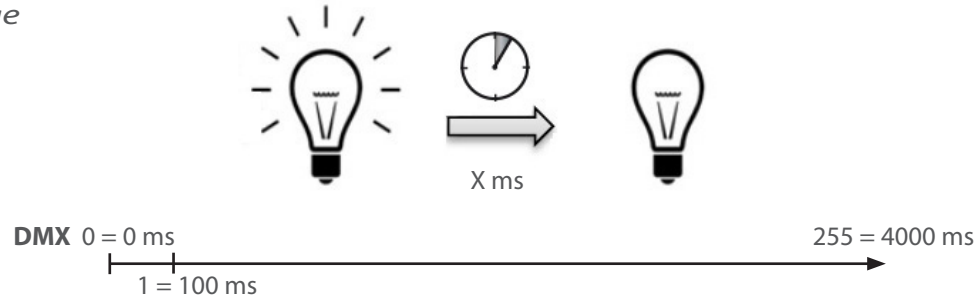

4.3.2 Control

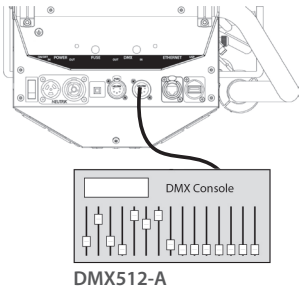

Remotely, with
DMX512-A / Art-Net / sACN protocols
Mode 3 – 4 only

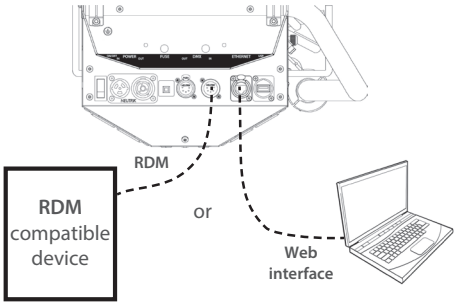

➡ Set through RDM protocol or web interface

Mode	Speed
NONE	OFF
SLOW	700 ms
MEDIUM	470 ms
FAST	350 ms
CUSTOM	0 - 4000 ms

Locally, through the local control

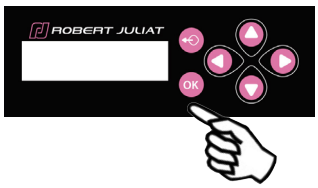

Only when no DMX detected :
➡ selection in SETUP/DIMMER/ **RESPONSE TIME**

Mode	Speed
NONE	OFF
SLOW	700 ms
MEDIUM	470 ms
FAST	350 ms
CUSTOM	0 - 4000 ms

4.4 Beam size adjustment

4.4.1 Range

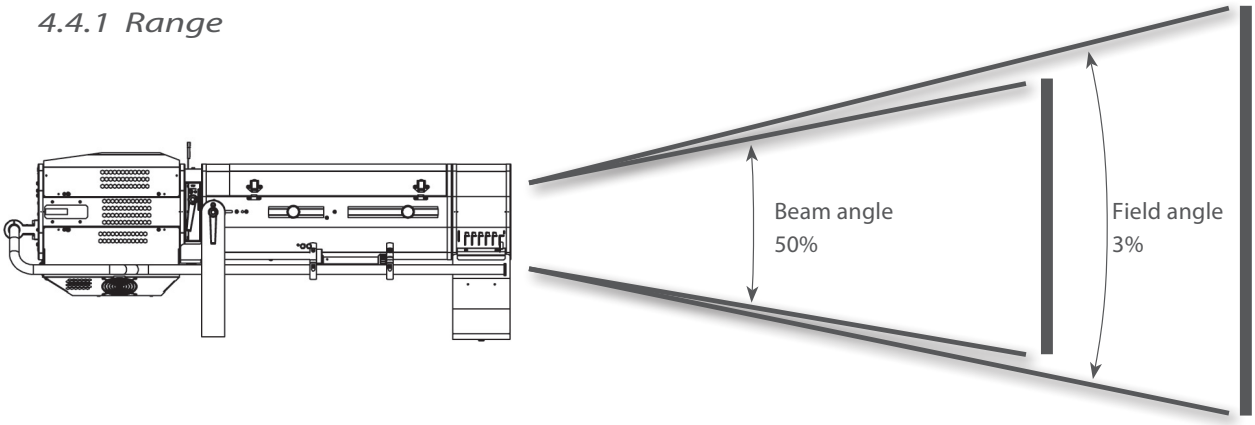

Model	Angles	Minimum angle	Maximum angle
OZ 1169	Beam angle	6.9°	13.4°
	Field angle	7.1°	13.8°

Model	Angles	Minimum angle	Maximum angle
ALICE 1469	Beam angle	12.9°	20.6°
	Field angle	13.2°	21.1°

4.4.2 Control

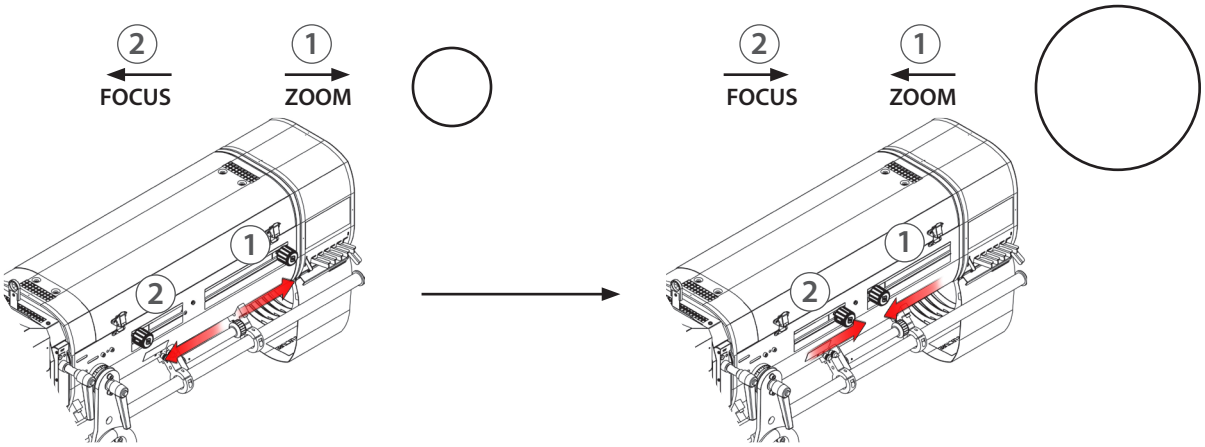

4.5 Pan / Tilt

4.5.1 Range

Function	Range
PAN 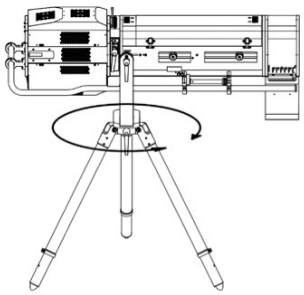	0 —> 360°
TILT 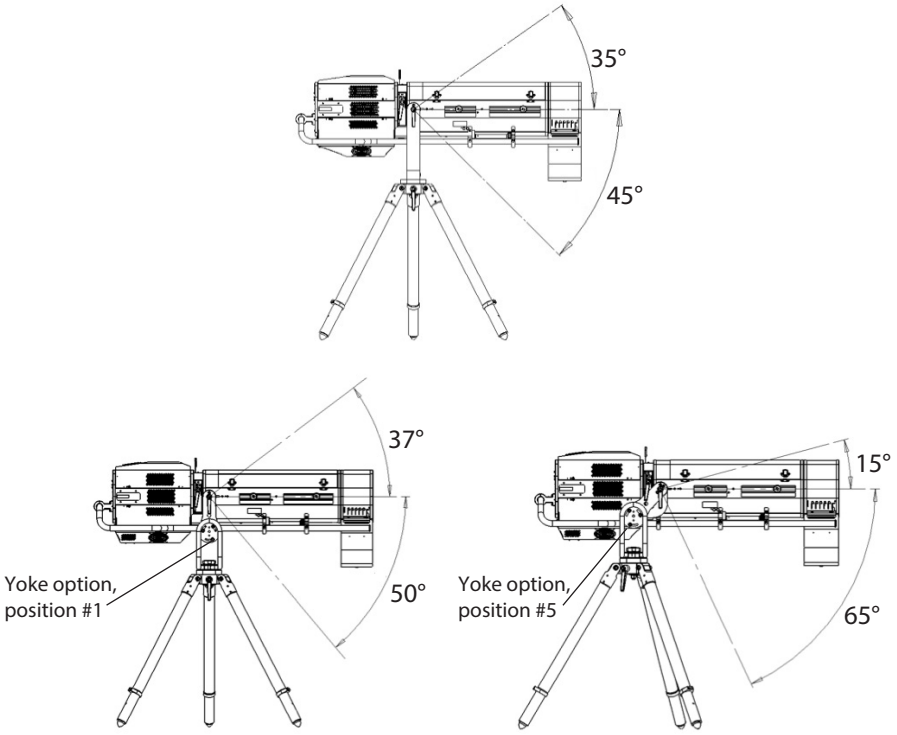	

4.5.2 Control

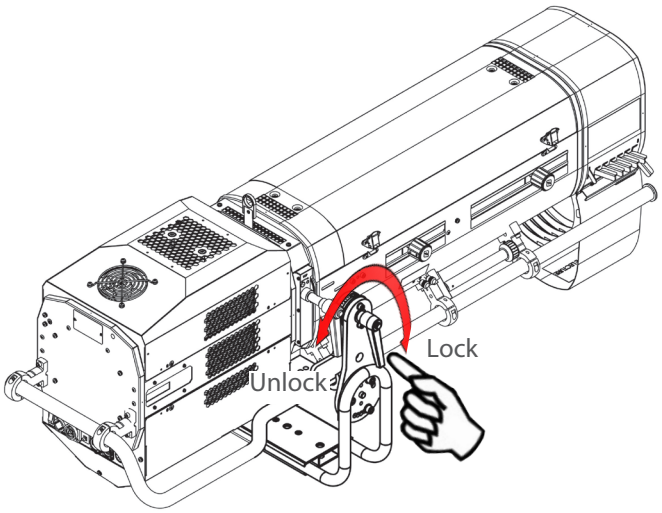

4.6 Iris

4.6.1 Range

• Irising

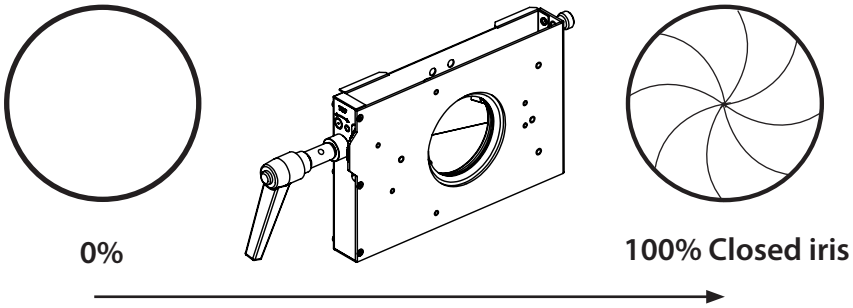

4.6.2 Control

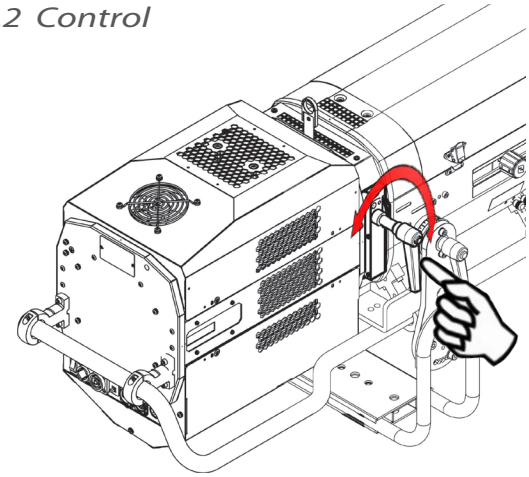

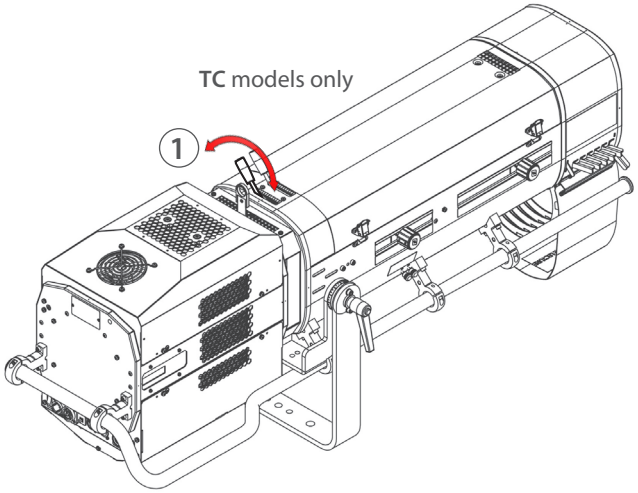

4.7 Gobo

4.7.1 Range

Type	Standard gobo - A size
Dimensions	Ø100 mm Ø72 mm Maximum image size • Metal • Glass
Installation	Cf. section: 3.4.4

4.7.2 Control

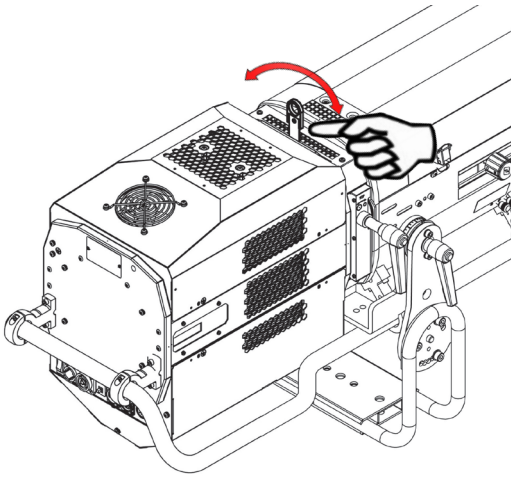

4.8 Colour

4.8.1 Range

Type	Coloured gel filter
Dimension	**Ø210 mm** 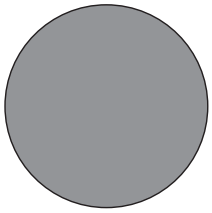
Installation	Cf. section: 3.4.2 & section 3.4.3 Place dark colours towards the front end.

4.8.2 Control

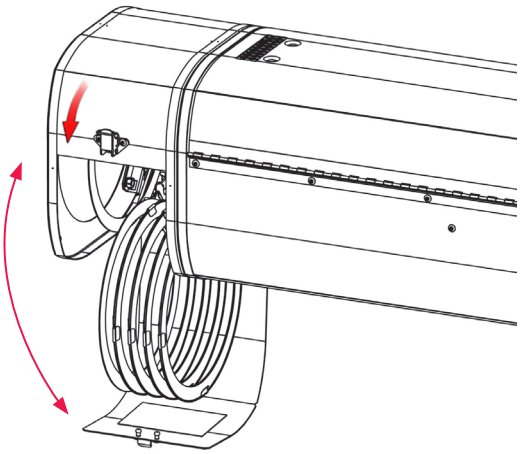

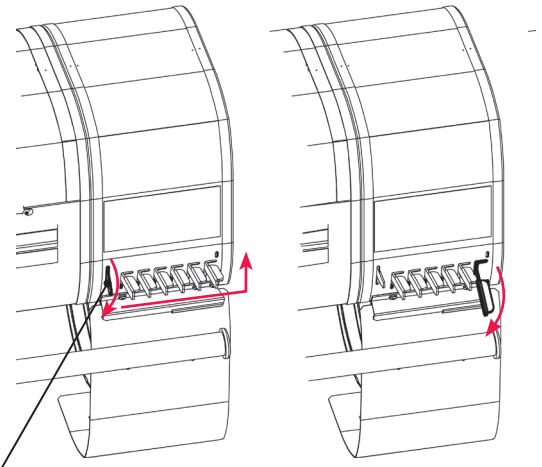

Unlock = release colours

Colour engaged

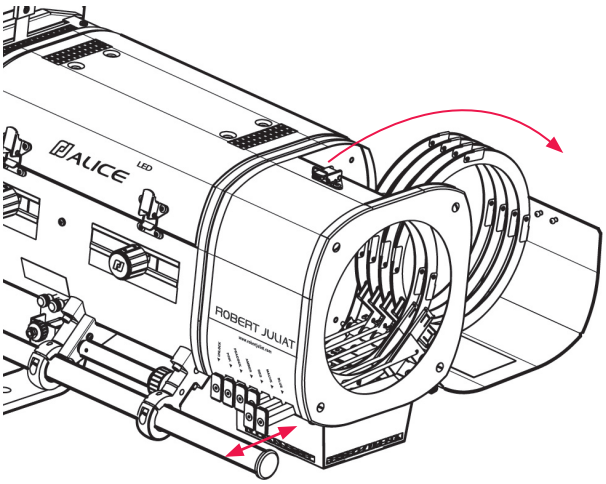

Push / Pull

4.9 Frost and correction filters

4.9.1 Range

Type	Frost or CTO glass
Dimension	**Ø97 mm** 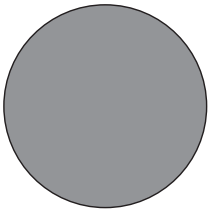
Installation	Cf. section: 3.4.6

4.9.2 Control

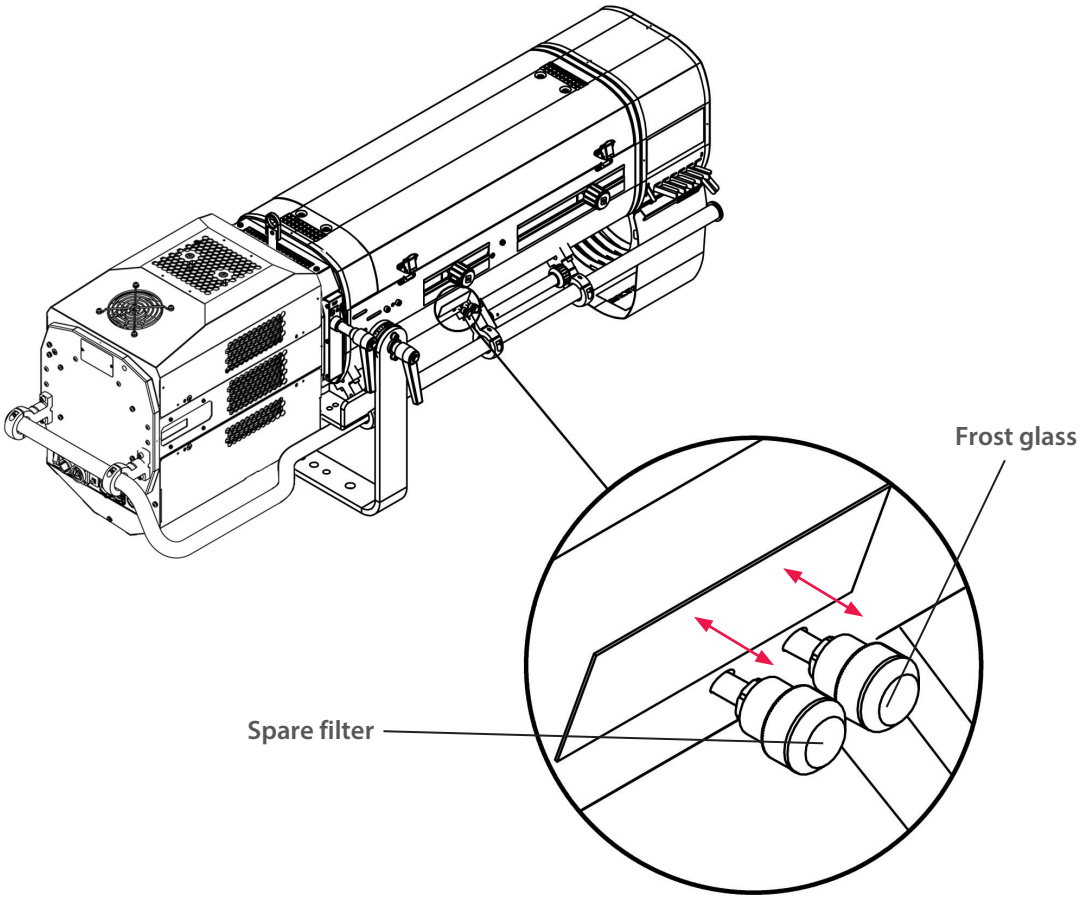

4.10 Horizontal chopper

4.10.1 Range

Type	Accessory option: PG80 chopper kit
Dimension	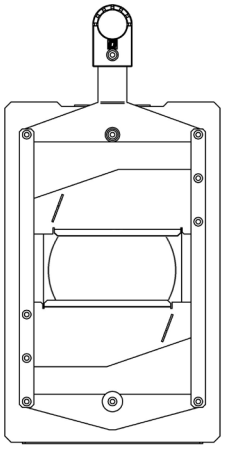 **Ø80 mm**
Installation	Cf. section: 3.4.8

4.10.2 Control

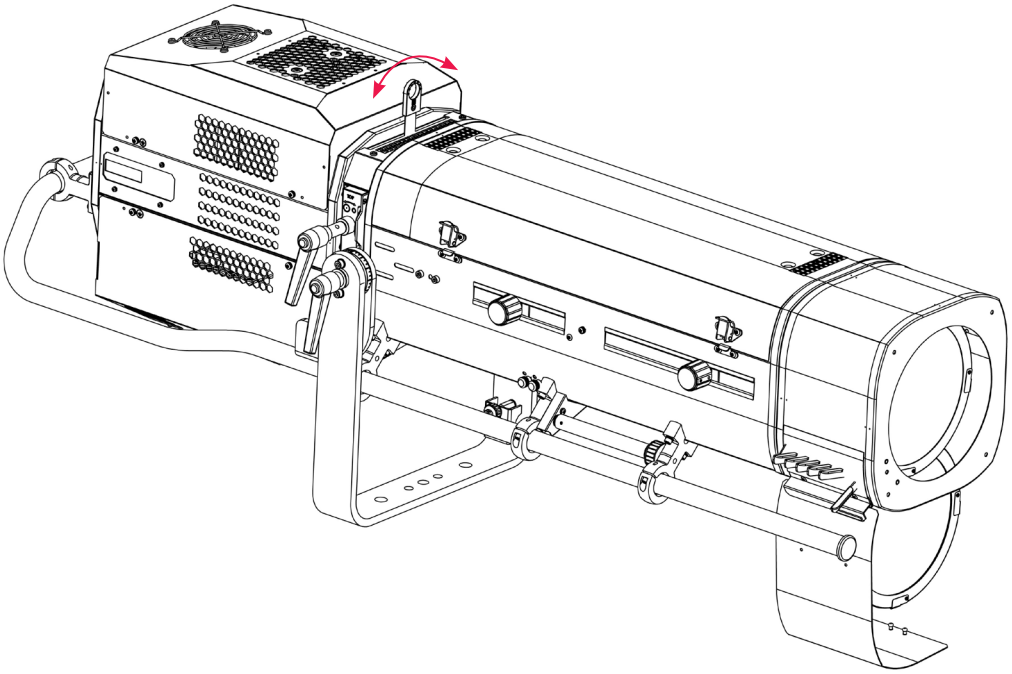

5 Controls and parameters

5.1 Local display and controls

5.1.1 Display

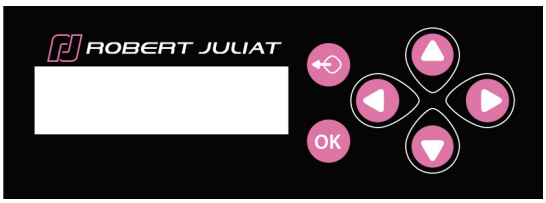

	Function
	Exit the current menu option and/or go back
	Press for 3 secs to enter Focus mode
OK	Enter the current menu option and/or valid
	Scroll through menus and/or Increase data value
	Scroll through menus and/or Decrease data value
	Scroll through menus and/or Increase data value
	Scroll through menus and/or Decrease data value

5.1.2 Menu

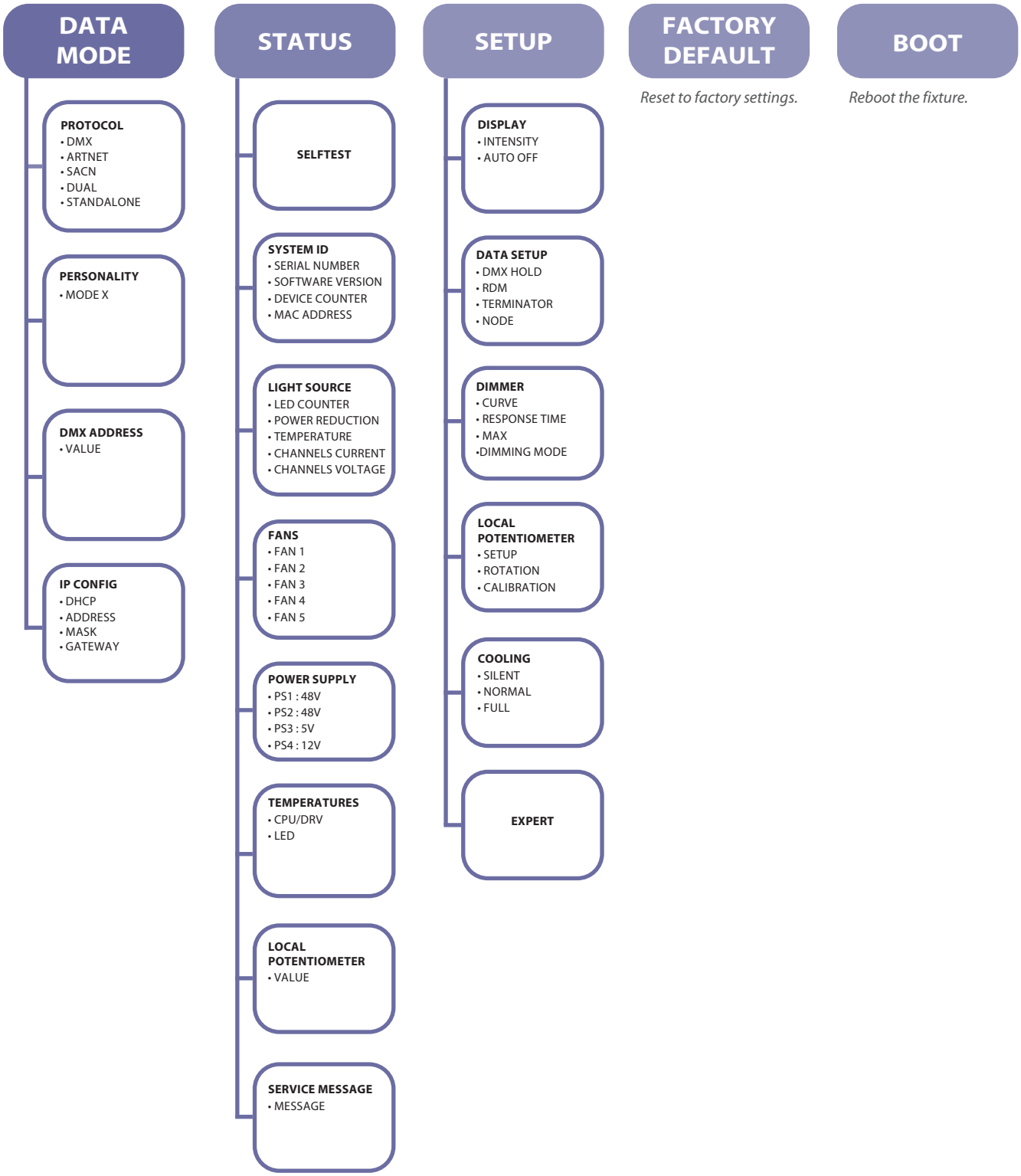
DATA MODE
PROTOCOL
• DMX
• ARTNET
• SACN
• DUAL
• STANDALONE
PERSONALITY
• MODE X
DMX ADDRESS
• VALUE
IP CONFIG
• DHCP
• ADDRESS
• MASK
• GATEWAY
STATUS
SELFTEST
SYSTEM ID
• SERIAL NUMBER
• SOFTWARE VERSION
• DEVICE COUNTER
• MAC ADDRESS
LIGHT SOURCE
• LED COUNTER
• POWER REDUCTION
• TEMPERATURE
• CHANNELS CURRENT
• CHANNELS VOLTAGE
FANS
• FAN 1
• FAN 2
• FAN 3
• FAN 4
• FAN 5
POWER SUPPLY
• PS1 : 48V
• PS2 : 48V
• PS3 : 5V
• PS4 : 12V
TEMPERATURES
• CPU/DRV
• LED
LOCAL POTENTIOMETER
• VALUE
SERVICE MESSAGE
• MESSAGE
SETUP
DISPLAY
• INTENSITY
• AUTO OFF
DATA SETUP
• DMX HOLD
• RDM
• TERMINATOR
• NODE
DIMMER
• CURVE
• RESPONSE TIME
• MAX
•DIMMING MODE
LOCAL POTENTIOMETER
• SETUP
• ROTATION
• CALIBRATION
COOLING
• SILENT
• NORMAL
• FULL
EXPERT
FACTORY DEFAULT
Reset to factory settings.
BOOT
Reboot the fixture.

5.1.3 Parameters

→ Selection in *SETUP/DISPLAY MODE* menu

Display	Mode	Description
000% NO DMX / NO MASTER / NODE OFF 001	Always ON	Main display (home screen) always ON
SETUP / DISPLAY / INTENSITY Intensity : 4 Intensity / Auto-Off	Intensity	Adjust the intensity of the screen *To change value, press buttons :*   press OK to validate
SETUP / DISPLAY / AUTO OFF Always ON Intensity / Auto-Off	Auto-OFF	Main display OFF after 20 seconds

5.2 DMX512 - A remote control

5.2.1 Protocol

E1.11 – 2008, USITT DMX512-A

5.2.2 Configuration

Set mode through web interface

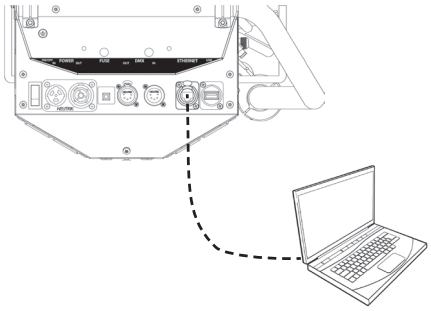

Set mode through RDM protocol

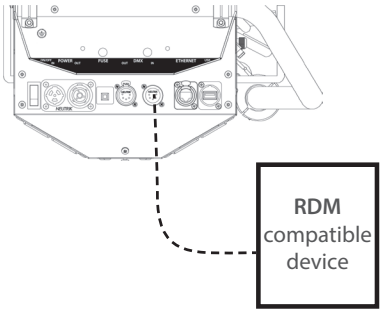

Locally, through the local control

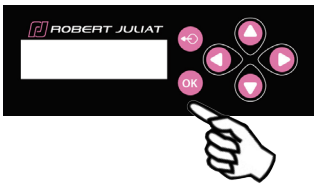

1 - Set DMX address
2 - Set personality mode (***see 5.2.4.* DMX chart**)

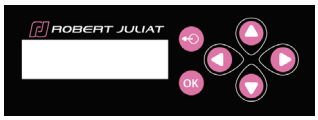

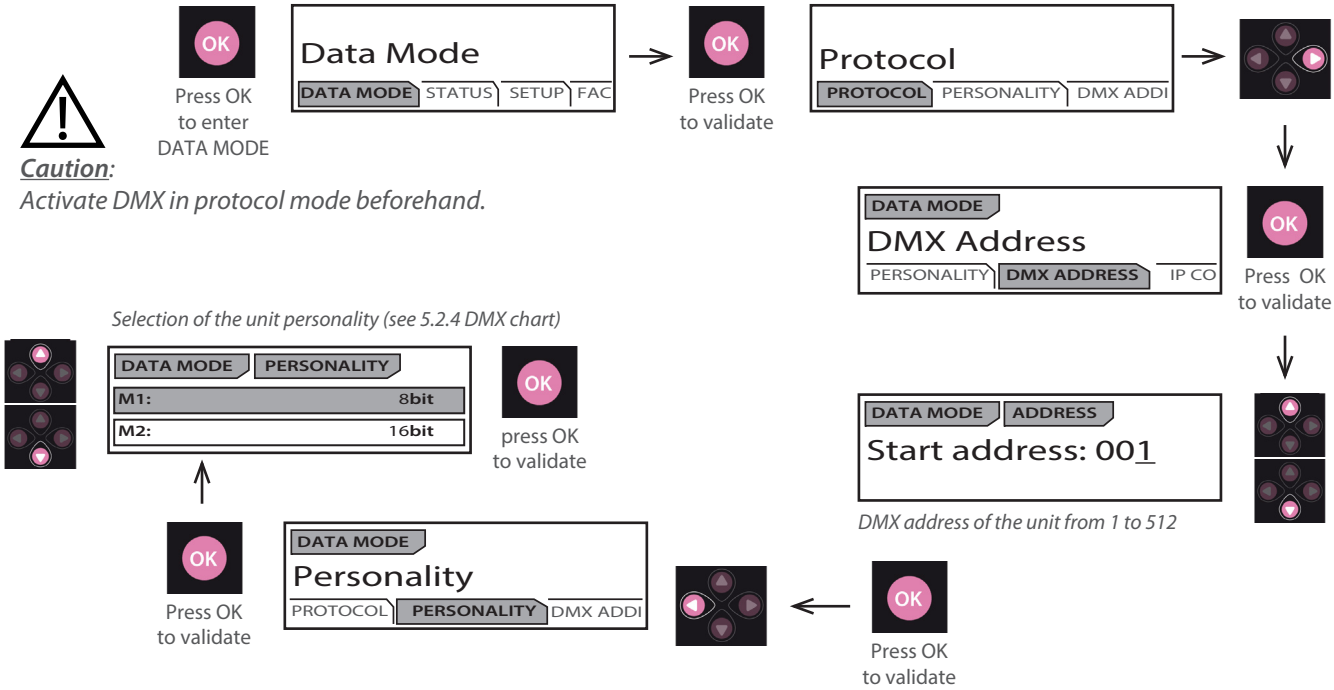

Caution:
Activate DMX in protocol mode beforehand.

5.2.3 Parameters

5.2.3.1 DMX Hold

➡ Set through RDM protocol, Web interface or local control

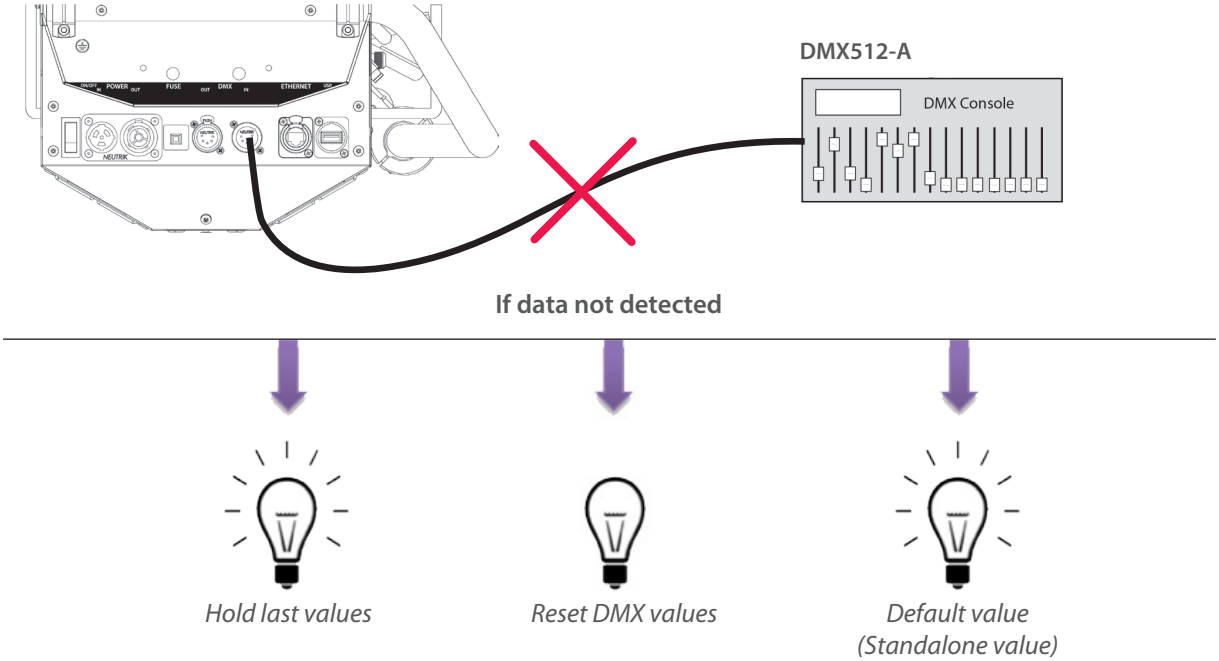

5.2.4 DMX chart

DMX Channel	Mode 1: Dimmer8B	Mode 2: Dimmer16B	Mode 3: Profile8B	Mode 4: Profile16b	Mode 5: Followspot8b	Mode 6: Followspot16b
1	Dimmer	Dimmer	Dimmer	Dimmer	Dimmer	Dimmer
2		Dimmer fine	Strobe duration	Dimmer fine	Master	Dimmer fine
3			Strobe speed	Strobe duration	Strobe duration	Master
4			Response time	Strobe speed	Strobe speed	Master fine
5			Control mode	Response time	Response time	Strobe duration
6				Control mode	Control mode	Strobe speed
7						Response time
8						Control mode

5.2.5 DMX ranges

5.2.5.1 Strobe duration

Range min	Range max	Function
0	0	Strobe OFF
1	255	Strobe ON - 1 ms → 20 ms

5.2.5.2 Strobe speed

Range min	Range max	Function
0	255	Frequency: 0,1 Hz → 10 Hz

5.2.5.3 Response time

Range min	Range max	Function
0	0	OFF
1	255	Response time: 0,20 ms → 4 s

5.2.5.4 Control mode

Range min	Range max	Function
0	0	
1	10	RDM disabled
11	20	RDM enabled
21	100	not used
101	110	Cooling mode: Silent
111	120	Cooling mode: Normal
121	130	Cooling mode: Full power
131	140	Front Ext disable
141	150	Front Ext enable
151	255	not used

Function activated after 5 seconds - need to go back to zero to activate second function.

5.3 RDM remote control

5.3.1 Protocol

ANSI E1.20 – 2010 / ANSI E1.37 - 1

For more information about RDM protocol: http://www.rdmprotocol.org/

5.3.2 Functions

PID		Description	Standard	Get	Set	Queued_ Message	Ack_Timer	VERSION 4.00
Network Management								
00	01	DISCOVERY_UNIQUE_BRANCH	E1.20					✓
00	02	DISCOVERY_MUTE	E1.20		✓			✓
00	03	DISCOVERY_UNMUTE	E1.20		✓			✓
00	15	COMMUNICATION_STATUS	E1.20	✓	✓			✓
Status Collection								
00	20	QUEUED_MESSAGE	E1.20	✓				✓
00	30	STATUS_MESSAGES	E1.20	✓				✓
00	31	STATUS_ID_DESCRIPTION	E1.20	✓				✓
00	32	CLEAR_STATUS_ID	E1.20		✓			✓
00	33	QUEUED_MESSAGE_SENSOR_SUBSCRIBE	E1.20-2023	✓	✓			
RDM Information								
00	50	SUPPORTED_PARAMETERS	E1.20	✓				✓
00	51	PARAMETER_DESCRIPTION	E1.20	✓				✓
Product Information								
00	60	DEVICE_INFO	E1.20	✓			✓	✓
00	70	PRODUCT_DETAIL_ID_LIST	E1.20	✓				✓
00	80	DEVICE_MODEL_DESCRIPTION	E1.20	✓				✓
00	81	MANUFACTURER_LABEL	E1.20	✓				✓
00	82	DEVICE_LABEL	E1.20	✓	✓	✓	✓	✓
00	90	FACTORY_DEFAULTS	E1.20	✓	✓		✓	✓
00	C0	SOFTWARE_VERSION_LABEL	E1.20	✓			✓	✓
00	C2	BOOT_SOFTWARE_VERSION_LABEL	E1.20	✓				✓
DMX512 Setup								
00	E0	DMX512_PERSONALITY	E1.20	✓	✓	✓	✓	✓
00	E1	DMX512_PERSONALITY_DESCRIPTION	E1.20	✓				✓
00	F0	DMX512_STARTING_ADDRESS	E1.20	✓	✓	✓	✓	✓
01	20	SLOT_INFO	E1.20	✓				✓
01	21	SLOT_DESCRIPTION	E1.20	✓				✓
Sensors								
02	00	SENSOR_DEFINITION	E1.20	✓				✓
02	01	SENSOR_VALUE	E1.20	✓				✓
Dimmer Settings								
03	40	DIMMER_INFO	E1.37-1	✓				✓
03	42	MAXIMUM_LEVEL	E1.37-1	✓	✓	✓	✓	✓
03	43	CURVE	E1.37-1	✓	✓	✓	✓	✓
03	44	CURVE_DESCRIPTION	E1.37-1	✓				✓
03	45	OUTPUT_RESPONSE_TIME	E1.37-1	✓	✓	✓	✓	✓
03	46	OUTPUT_RESPONSE_TIME_DESCRIPTION	E1.37-1	✓				✓
03	47	MODULATION_FREQUENCY	E1.37-1	✓	✓	✓	✓	✓
03	48	MODULATION_FREQUENCY_DESCRIPTION	E1.37-1	✓				✓
Power / Lamp Settings								
04	00	DEVICE_HOURS	E1.20	✓				✓
04	01	LAMP_HOURS	E1.20	✓	✓			✓
Display Settings								
05	01	DISPLAY_LEVEL	E1.20	✓	✓	✓	✓	✓

PID		Description	Standard	Get	Set	Queued_ Message	Ack_Timer	SULLY 4.00
Control								
10	00	IDENTIFY_DEVICE	E1.20	✓	✓	✓		✓
10	01	RESET_DEVICE	E1.20		✓		✓	✓
10	20	PERFORM_SELFTEST	E1.20	✓	✓	✓	✓	✓
10	21	SELF_TEST_DESCRIPTION	E1.20					✓
RDMnet Management								
07	00	LIST_INTERFACES	E1.37-2	✓				✓
07	01	INTERFACE_LABEL	E1.37-2	✓				✓
07	02	INTERFACE_HARDWARE_ADRESS_TYPE1	E1.37-2	✓				✓
07	03	IPV4_DHCP_MODE	E1.37-2	✓	✓		✓	✓
07	05	IPV4_CURRENT_ADDRESS	E1.37-2	✓			✓	✓
07	06	IPV4_STATIC_ADDRESS	E1.37-2	✓	✓			✓
07	09	INTERFACE_APPLY_CONFIGURATION	E1.37-2		✓			✓
07	0A	IPV4_DEFAULT_ROUTE	E1.37-2	✓	✓		✓	✓
07	0B	DNS_IPV4_NAME_SERVER	E1.37-2	✓	✓		✓	✓
PID Manufacturer								
85	58	SELFTEST_RESULT	E1.20	✓				✓
85	59	CURRENT_IP_ADDRESS	E1.20	✓			✓	✓
85	5A	CURRENT_NETMASK	E1.20	✓			✓	✓
85	5B	CURRENT_DRIVER_STATUS	E1.20	✓			✓	✓
85	5C	CUSTOM_RESPONSE_TIME_DESCRIPTION	E1.20	✓				✓
85	5D	CUSTOM_RESPONSE_TIME_VALUE	E1.20	✓	✓	✓	✓	✓
85	60	DATA_MODE_DESCRIPTION	E1.20	✓				✓
85	61	DATA_MODE_VALUE	E1.20	✓	✓	✓	✓	✓
85	62	STANDALONE_VALUE_DESCRIPTION	E1.20	✓				✓
85	63	STANDALONE_VALUE	E1.20	✓	✓	✓	✓	✓
85	64	SACN_UNIVERSE_VALUE_DESCRIPTION	E1.20	✓				✓
85	65	SACN_UNIVERSE_VALUE	E1.20	✓	✓	✓	✓	✓
85	66	ARTNET_UNIVERSE_VALUE_DESCRIPTION	E1.20	✓				✓
85	67	ARTNET_UNIVERSE_VALUE	E1.20	✓	✓	✓	✓	✓
85	68	SERIAL_DESCRIPTION	E1.20	✓				✓
85	69	SERIAL	E1.20	✓	✓	✓		✓
85	6A	DMX_HOLD_DESCRIPTION	E1.20	✓				✓
85	6B	DMX_HOLD	E1.20	✓	✓	✓	✓	✓
85	6C	COMMAND_LOCK_DESCRIPTION	E1.20	✓				✓
85	6D	COMMAND_LOCK_VALUE	E1.20	✓	✓	✓	✓	✓
85	6E	DRIVER_CALIBRATE_DESCRIPTION	E1.20	✓				✓
85	6F	DRIVER_CALIBRATE_VALUE	E1.20	✓	✓	✓	✓	✓
85	70	NODE_DESCRIPTION	E1.20	✓				✓
85	71	NODE_VALUE	E1.20	✓	✓	✓	✓	✓
85	72	TERMINATOR_DESCRIPTION	E1.20	✓				✓
85	73	TERMINATOR	E1.20	✓	✓	✓	✓	✓
85	74	DMX_ERROR_COUNTER_DESCRIPTION	E1.20	✓				✓
85	75	DMX_ERROR_COUNTER	E1.20	✓	✓	✓	✓	✓

5.4 Art-Net remote control

5.4.1 Protocol

Artistic Licence Art-Net v3 & v4.

For more information about Art-Net protocol: http://art-net.org.uk/

5.4.2 Configuration

Set mode through Web interface
(*see 5.7* **Web interface**)

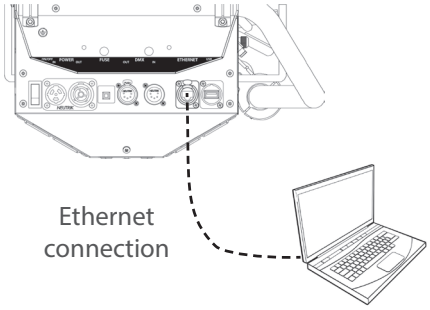

Locally, through the local control

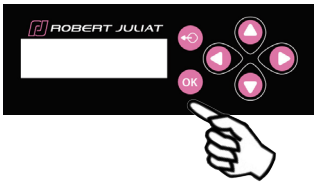

1 - If necessary, change IP settings
2 - Set Art-Net Universe
3 - Set DMX address
4 - Set personality mode (*see 5.2.4.* **DMX chart**)

5.4.3 Local set-up

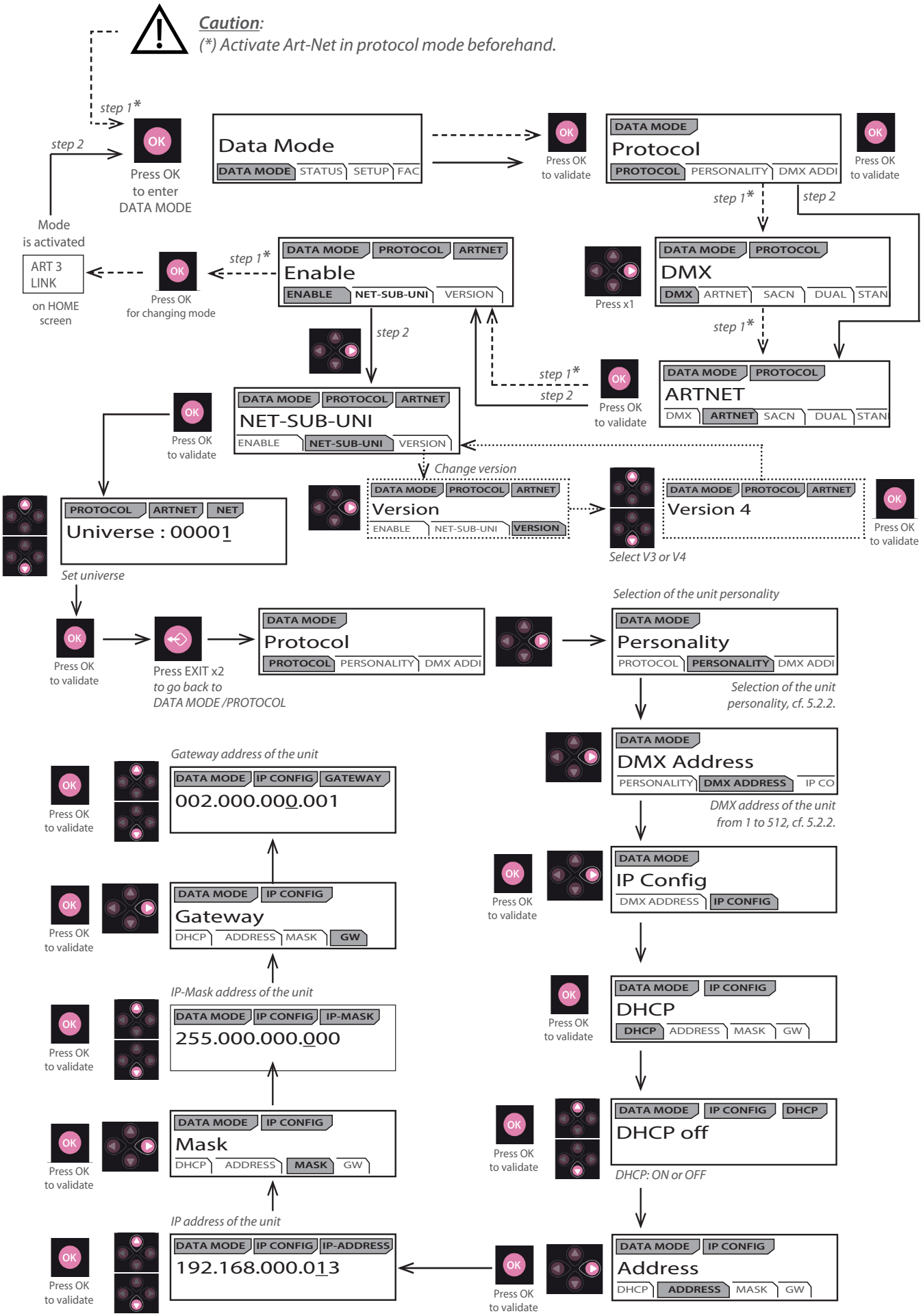

5.5 sACN remote control

5.5.1 Protocol

ANSI E1.31 – 2009 sACN (Streaming-ACN)

5.5.2 Configuration

Set mode through Web interface
(*see 5.7* **Web interface**)

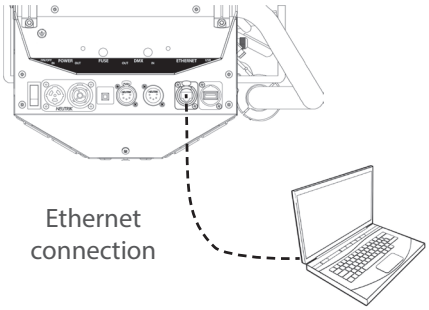

Locally, through the local control

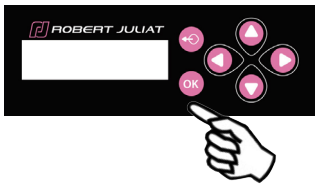

1 - If necessary, change IP settings
2 - Set sACN universe
3 - Set DMX address
4 - Set personality mode (*see 5.2.4.* **DMX chart**)

5.5.3 Local set-up

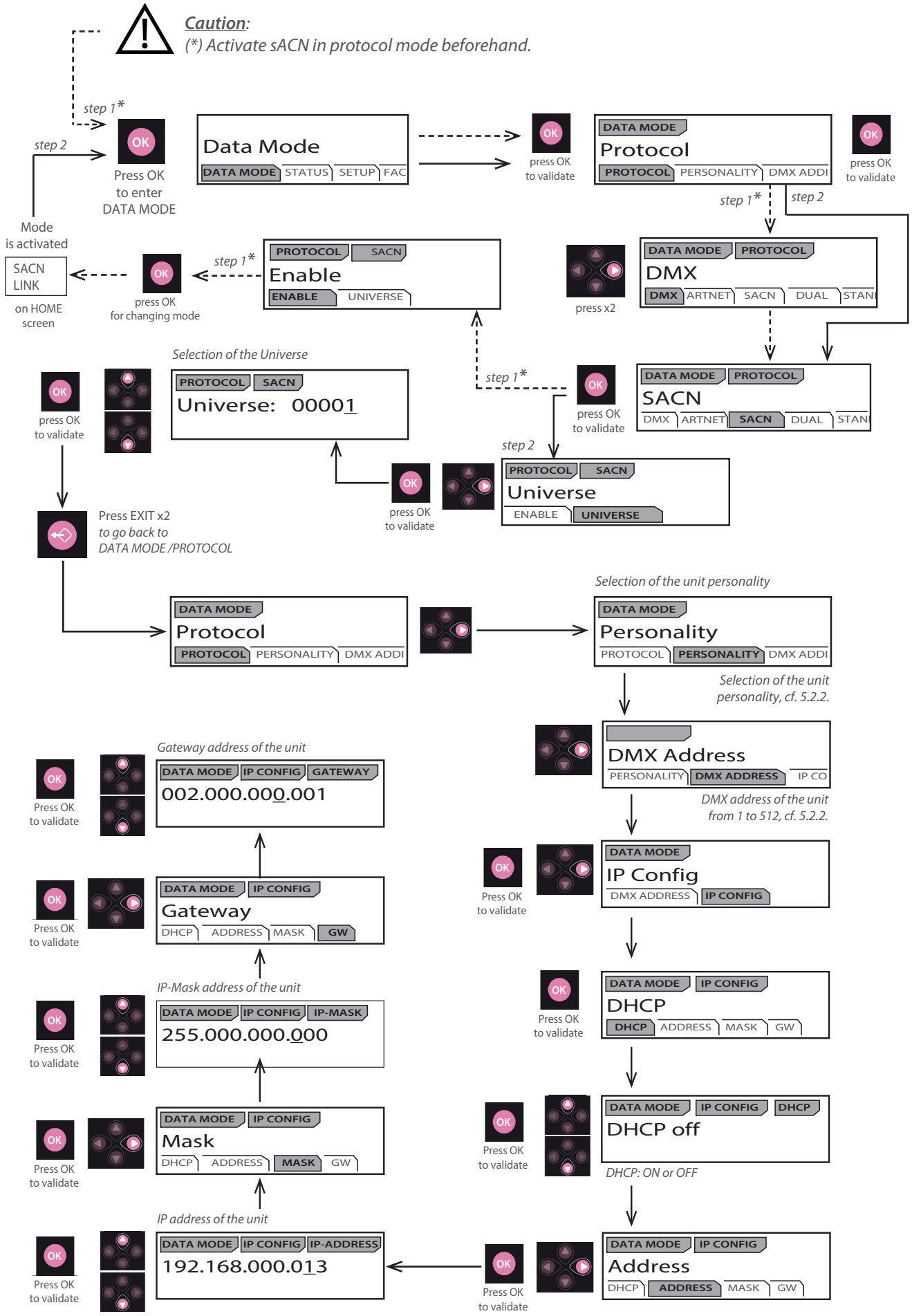

5.6 Dual remote control

5.6.1 Protocol

Dual Mode: Available only on an Ethernet network

It allows to send a DMX 512 signal through a Sacn data stream and at the same time to use an Artnet/ArtRdm data stream to control, set and monitor the equipment via RDM.

This mode can be set by Web interface or the local control screen.

5.6.2 Configuration

Set mode through Web interface
(*see 5.7* **Web interface**)

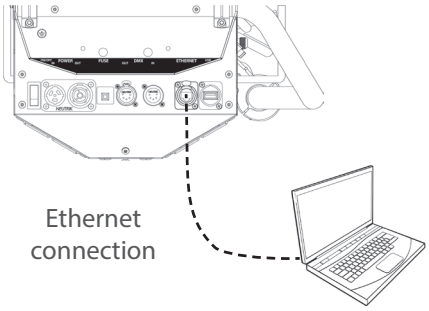

Locally, through the local control

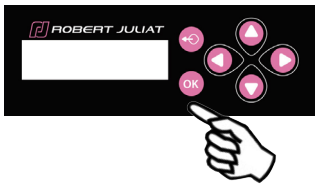

1 - If necessary, change IP settings
2 - Set DUAL universe
3 - Set DMX address
4 - Set personality mode (*see 5.2.4.* **DMX chart**)

5.6.3 Local set-up

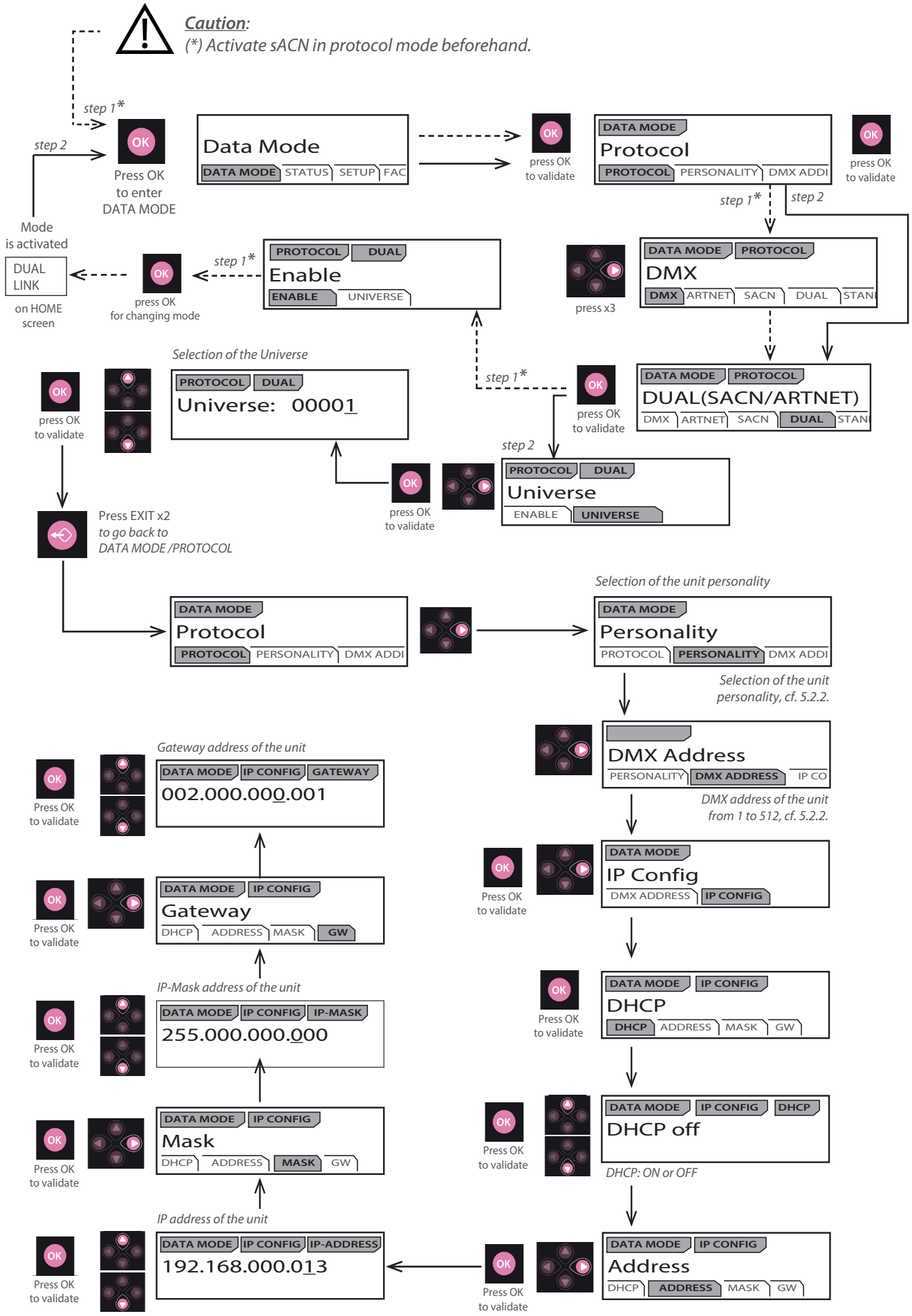

5.7 Web interface

5.7.1 Control

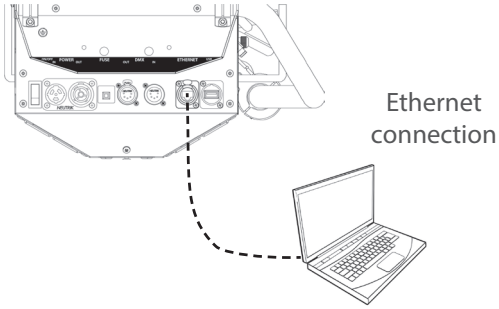

The fixture must be connected to a compatible network or directly to a computer using an ethernet cable.

5.7.2 Default IP address

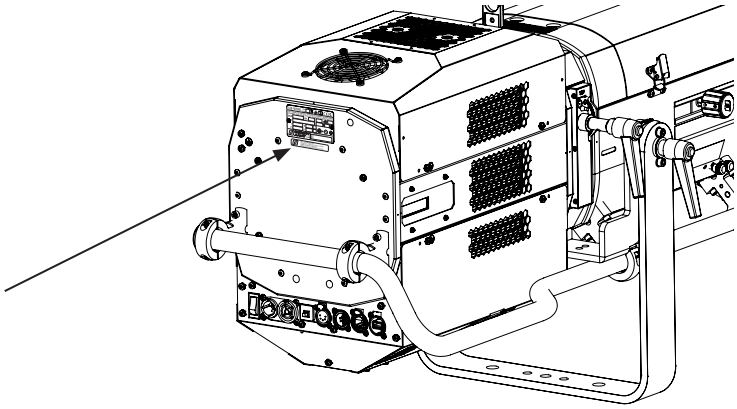

By defaut :
DHCP = OFF
Address = 2.XXX.XXX.XXX
Mask = 255.0.0.0

➡ If IP address unknown (due to a previous modification), a hard reset must be done (***see 6.6*** **Factory defaults**).

5.7.3 Network IP of the computer

The computer must be on the same network as the LED fixture.
Please refer to your computer Operating System to change IPV4 parameters :

- **Microsoft Windows**:
  https://support.microsoft.com/en-us/windows/change-tcp-ip-settings-bd0a07af-15f5-cd6a-363f-ca2b6f391ace
- **MAC OS**: https://support.apple.com/en-gb/guide/mac-help/mchlp2718/10.15/mac/10.15

1 - ADDRESS = 2.XXX.XXX.YYY with YYY ≠ XXX
Do not use the same IP address as the LED fixture
2 - MASK = 255.0.0.0

5.7.4 Connect to web interface

1 - Open a web browser (Microsoft Edge, Firefox, Apple Safari...)
2 - Enter the URL address of the LED fixture: http://2.XXX.XXX.XXX
3 - All parameters can be now modified

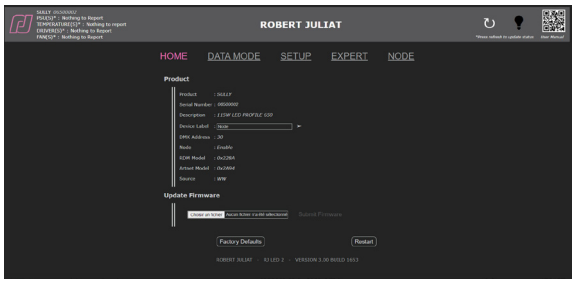

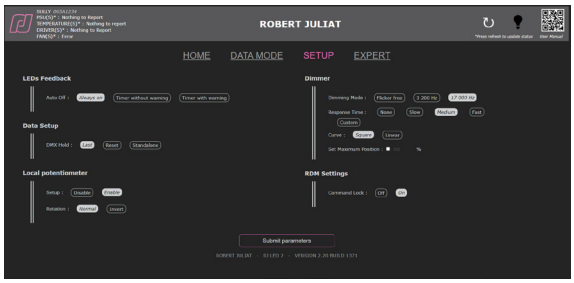

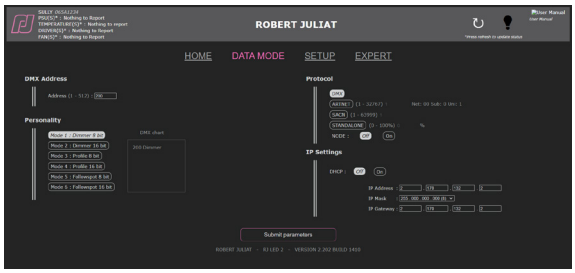

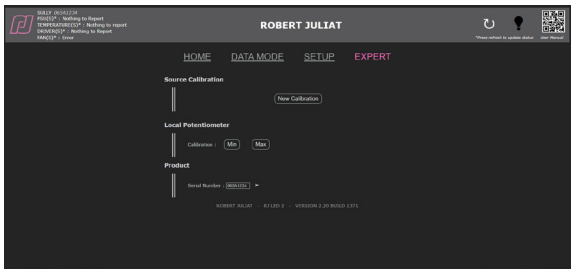

5.8 Fan cooling modes

5.8.1 Range

Modes	Silent	Normal	Full
Cooling	< 40.5 dB(A)	< 43.4 dB(A)	< 45.8 dB(A)
Brightness	60 → 85%	80 → 95%	100%

5.8.2 Control

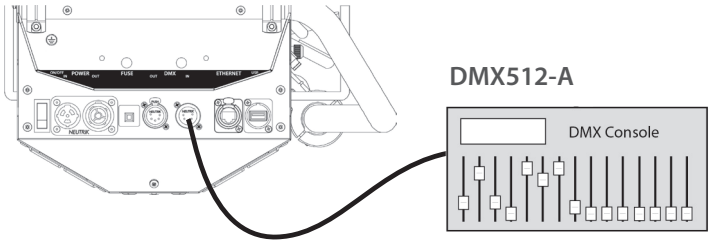

Remotely by DMX512-A
Mode 1 – 2 – 3 – 4

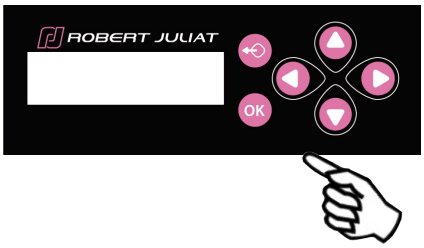

Locally → selection in
SETUP/**COOLING**

5.9 Gel Fan mode

GEL FAN menu:

• ***Enable**: activates / deactivates the fan of the colour changer.*

6.1 Preventive maintenance

6.1.1 Frequency

General maintenance should be performed at least once a year or more frequently if the equipment is operated in adverse conditions (smoke, heat, humidity, touring, etc.).

6.1.2 General cleaning

Remove dust from the unit.
Front glasses can be cleaned with solutions containing alcohol.

6.1.3 General visual check

- No trace of heat.
- No loose contacts.
- No missing parts.
- Tighten mechanical assemblies (screws, bolts and nuts, etc.).

6.1.4 LED source

- Do not touch the surface of the LED source (no contact with your hands or any tools).
- Do not put compressed air directly on the source.
- Contact a certified RJ distributor in case of residuals or other objects located on the surface of the LED source.

6.1.5 Optics

Only use solutions containing alcohol to clean optical parts (lenses).
- To clean the optical parts, use a soft cloth in combination with distilled water or isopropyl alcohol recommended for coated optics. Do not use any cleaning product that contains solvents or abrasives, as these can cause surface damage.
- Dry with a soft lint-free cloth.

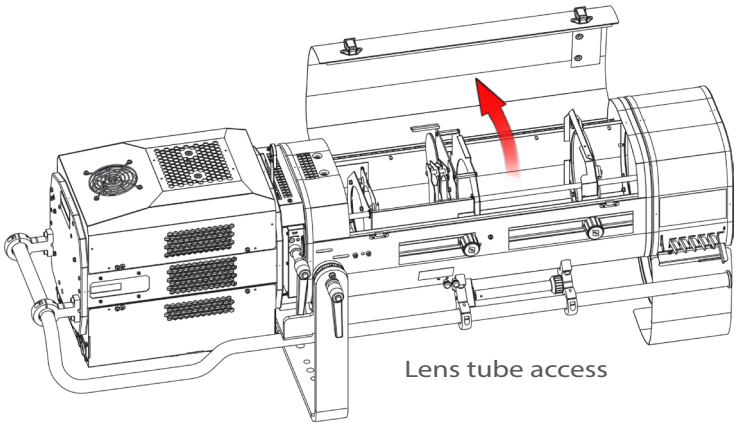

6.1.6 Inner fans & LED glass protection cleaning

Only use solutions containing alcohol to clean inner parts.

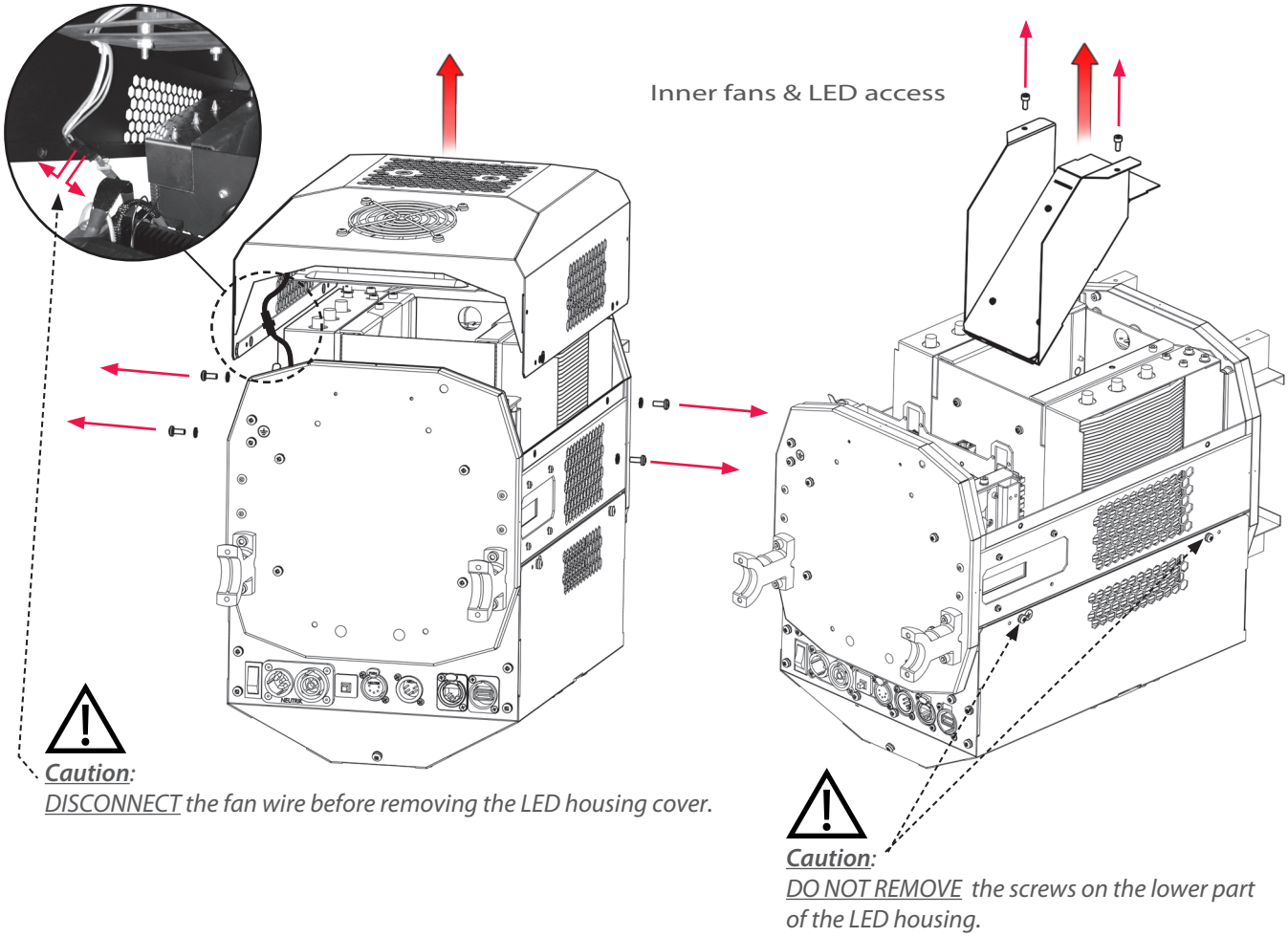

6.2 Analysis

In case of problem, contact RJ distributor with the following information:

- Model, version and serial number of the product.
- From the menu status:
  - Software version
  - LED board IDs
  - Device hours
- Description of the problem.

6.3 Local potentiometer

→ selection in SETUP / LOCAL POTENTIOMETER (**LOCAL POT**)

Function	Parameters	Description
Setup SETUP LOCAL POT Setup SETUP ROTATION CALIBRATION	SETUP LOCAL POT SETUP Disable Enable	(1169 & 1469) Disable OK Press OK to validate Enable (1169TC & 1469TC)
Rotation SETUP LOCAL POT Rotation SETUP ROTATION CALIBRATION	SETUP LOCAL POT ROTATION Normal(CW) Invert (CCW)	Normal (CW): Clockwise OK Press OK to validate Invert (CCW): Anticlockwise
Calibration SETUP LOCAL POT Calibration ROTATION CALIBRATION	SETUP LOCAL POT CALIB Min Max SETUP LOCAL POT CALIB Min Max	Adjust to the minimum position OK Press OK to validate Adjust to the maximum position OK Press OK to validate

6.4 Electronic thermal management system

In case of overheating, light intensity will be reduced by the system.
Power reduction and temperature values are available by using a RDM protocol compatible device.

6.5 Firmware update

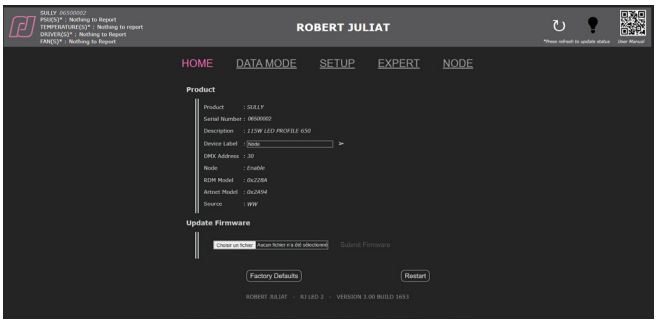

1. Firmware available on www.robertjuliat.com//followspots -> Alice or Oz
2. Download and unzip the file
   There are 4 files contained in the folder:
   - Firmware (.upd2 format)
   - Firmware History
   - Update Procedure
   - User Manual from firmware V4.00
3. Switch on the unit
4. Connect Network from computer to the unit
5. Open a web browser (Microsoft Edge, Firefox, Apple Safari...)
6. Enter the URL address to connect to the web interface (***see 5.7***)
7. Upload your firmware file (.upd2) in the "Update firmware" section and then click on 'Submit firmware"

6.6 Factory defaults

6.6.1 Modes

Mode	Description
Restart	Software reset – all user parameters are kept
Factory defaults	Set all user parameters to factory default values

6.6.2 Control

Set to factory defaults / reset through web interface (Home page)

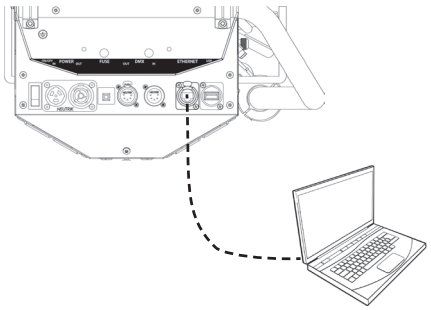

Set to factory defaults / reset through RDM protocol

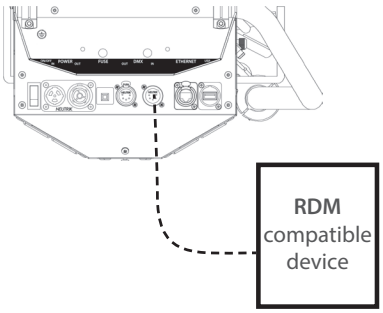

Set to factory defaults / reset through local control

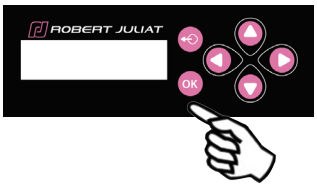

Select SELFTEST in the main menu :

Press OK to start SELFTEST

STATUS
SELFTEST
SELFTEST | SYSTEM ID | LIGHT SOUP

There are 9 tests available that will be performed by the fixture. At the end of each test, a PASS/FAIL message will be displayed.

FANS
PASS

Fan Test

POWER
PASS

PSU Test

TEMPERATURE SENSORS
PASS

Temperature Test

NETWORK
Network fail or no network

Network Test
A data connection is required.

DRIVER
Test in progress

Driver Test
Each driver is tested individually and a calibration is launched if required.

DRIVER
Calibration in progress

DRIVER
PASS

Main Power Stress
PASS

48V PSU Stress Test

POTENTIOMETER
Turn potentionmeter to maximum then press OK

Dimmer Potentiometer Test
Follow the instructions.

Press OK

POTENTIOMETER
Side / Top ctrl => press UP
Top ctrl inv => press DOWN

DMX IN

DMX IN fail or NO DMX

DMX OUT

Plug DMX OUT then press OK

DMX OUT

DMX OUT fail or NO DMX

DMX Test

DMX data is required to complete this test.

LEDS

green

LEDS

blue

LEDS

red

Signal Leds Test

test report: Fail P=Pass F=Fail

fans P	pow P	temp P	dmxi P
dmxo F	net F	drv P	pot P

Test Report

To be communicated to **RJ Service** if requested :
service@robertjuliat.fr